REALISTIC®

Service Manual

19-1101

HTX-100
10 METER SSB/CW TRANSCEIVER
Catalog Number : 19-1101

TABLE OF CONTENTS

	PAGE
Specifications	2
Disassembly Instructions	6
Block Diagram	7
Circuit Description	8
Alignment Procedure	10
Alignment Points Locations	15
Troubleshooting Hints	16
PCB (Top and Bottom) Views	20
Wiring Diagrams	25
Electrical Parts List	27
Exploded View	48
Mechanical Parts List	49
Transistor Voltage Chart	51
IC Voltage Chart	52
Semiconductor Lead Identification	56
IC Internal Diagram	57
Schematic Diagram	61

©1988 Tandy Corporation.
All Rights Reserved.
Realistic and Radio Shack are registered trademarks of Tandy Corporation.

SPECIFICATIONS

GENERAL

1. Frequency Range		: 28.0000 ~ 29.6999 MHz
2. Microphone		: 600 Ω, Dynamic Type
3. Speaker		: 8 Ω, 5 W
4. Antenna Connector		: M Type
5. Jacks & Connectors		: MIC (8 PIN), DC Power (3 PIN), EXT SP (3.5φ), CW Key IN (3.5φ), Phone (3.5φ)
6. Controls		: Mode selector (SSB/CW), ON/OFF Volume, Squelch, RF Gain, Power HI/LOW Switch, RIT, NB ON/OFF Switch, Frequency Dial, Frequency/Memory UP/DOWN SW, Store Key, 500 k Key, MEMO key, Step Key, F. LOCK Switch, TX/RX Switch
7. Display/Indicators	LCD	: Frequency Indicator, Memory Channel Indicator, Mode Indicator (CW/SSB) MEMO, TX Indicator
	LED	: RF/S Meter
8. Size		: $2\text{-}^{7}/_{16}$"(H) × $7\text{-}^{9}/_{32}$"(W) × $7\text{-}^{7}/_{8}$"(D)/ 62 mm(H) x 185 mm(W) x 200 mm(D) (Unit)
9. Weight		: 4 lbs 3 oz (1.9 kgs) (Unit)
10. Accessories		: DC Power Cable with Fuse Microphone with UP/DOWN SW Mic Hanger
11. Power Source		: 13.8 V DC + 15/−20 %, Negative Ground

MEASUREMENT CONDITIONS

1. Power Source		: 13.8 V (DC)
2. Antenna Impedance		: 50 Ω
3. Test Temperature		: 77°F (25°C)
4. SSB Modulation Frequency, Two Tone		: 500 Hz & 2400 Hz
5. Mean Signal Input Level		: 1000 μV
6. Reference Audio Output Power		: 0.5 W
7. Audio Frequency	SSB	: 1 kHz
	CW	: 800 Hz
8. Audio Output Load		: 8 Ω Resistive

TRANSMITTER SECTION

ITEMS			UNIT	NOMINAL	LIMIT
1. Frequency Tolerance at 25°C (5 minutes after Switch on) (SSB CW)			Hz	±300	±1500
2. Carrier Power	CW	HI	W	25.0	22.5 ∿ 29.0
		LOW	W	5.0	3.0 ∿ 7.0
3. PEP Power (18 Wpep + 10 dB up Two Tone)	SSB	HI	Wpep	25.0	22.5 ∿ 28.0
		LOW	Wpep	5.0	3.0 ∿ 7.0
4. Spurious Harmonic Emission (SSB CW)			dB	−50	−40
5. Carrier Suppression		SSB	dB	−55	−40
6. Unwanted Sideband Suppression (at 2500 Hz 4 Wpep 16 dB up Single tone)		SSB	dB	−50	−40
7. Battery Drain					
SSB: at No Modulation			mA	800	1500
CW: NOT KEY Down			mA	800	1500
8. Battery Drain SSB: MAX Wpep, Two Tone		HI	mA	3200	4500
		LOW	mA	1600	2500
CW: MAX Carrier		HI	mA	5000	6000
		LOW	mA	2400	3200
9. Modulation Frequency Response (1 kHz, 0 dB Reference)					
Lower at 450 Hz		SSB	dB	−4	−10
Upper at 2.0 kHz		SSB	dB	−6	−10
10. Microphone Sensitivity SSB: For 10 Wpep Output			mV	1.0	2.0
11. ALC Range SSB: 18 — 28 Wpep			dB	50	40
12. CW Monitor Output			mW	5	2.5 ∿ 10
13. CW Monitor Frequency			Hz	1000	850 ∿ 1150
14. CW Monitor Distortion			%	2.5	6

RECEIVER SECTION (NB Switch OFF)

ITEMS		UNIT	NOMINAL	LIMIT
1. Max. Sensitivity	CW/SSB	μV	0.25	1.0
2. Sensitivity for 10 dB S/N	CW/SSB	μV	0.25	1.0
3. AGC Figure of Merit, 50 mV for 10 dB Change in Audio Output	CW/SSB	dB	80	70
4. Overall Audio Fidelity at 6 dB down				
Upper Frequency	SSB	Hz	3200	2500 ∿ 3900
Lower Frequency	SSB	Hz	400	200 ∿ 500
5. Adjacent Channel Selectivity (10 kHz, 1 GEN)	CW/SSB	dB	70	60
6. Maximum Audio Output Power	CW/SSB	W	3.0	2.0
7. Audio Output Power at 10% THD	CW/SSB	W	2.0	1.8
8. RF Gain Control Range	CW/SSB	dB	55	30 ∿ 70
9. Squelch Sensitivity at Thresnold	CW/SSB	μV	0.5	2.0
10. Squelch Sensitivity at Tight	CW/SSB	μV	1000	250 ∿ 4000
11. S Meter Sensitivity at "S-9" (No Modulation)	CW/SSB	μV	100	25 ∿ 400
12. Image Rejection Ratio	CW/SSB	dB	65	55
13. IF Rejection Ratio	CW/SSB	dB	65	55
14. Oscillator Dropout Voltage	CW/SSB	V	9	11
15. Battery Drain at No Signal	CW/SSB	mA	500	800
16. Battery Drain at Max. Audio Output	CW/SSB	mA	1000	1500
17. RIT Range	CW/SSB	kHz	±1.5	±1.0 ∿ ±2.0
18. S/N Ratio at input 1mV	SSB	dB	45	30
19. THD at 500 mW 1 kHz	SSB	%	2.5	6
	CW	%	2.5	6
20. Output Deference 1mV SSB 0 dB Ref.	CW	dB	0	±5
21. Noise Blanker Performance	CW	dB	20	15
	SSB	dB	20	15
22. RX/TX Frequency Deference	CW	Hz	±50	±300
	SSB	Hz	±50	±300

		UNIT	NOMINAL	LIMIT
23. Phone Output Power (EXT. out 0.5W)	CW	mW	1.25	0.8 ∿ 2
	SSB	mW	1.25	0.8 ∿ 2

IF FREQUENCY

1.	IF		10.695 MHz
2.	Pass Band	SSB/CW	±1.1 kHz (−6 dB) ±2.5 kHz (−60 dB)

The receiving signal system is the single conversion type. The local oscillation is at the upper side.

OVERALL PERFORMANCE

1. Output Protection: Shall meet for 5 minutes for all VSWR's (around the Smith Chart) of 5:1 without damage.
2. Output stability of all VSWR'S (around the Smith Chart) of up to 5:1 under continuous operation of a duty cycle of 5 minutes transmitting, and 1 minute receiving.
3. Standard Operating Temperature: +14°F ∿ +122°F (−10°C ∿ + 50°C)
4. Storage Temperature: −22°F ∿ +140°F (−30°C ∿ + 60°C)

Note: Nominal specs represent the design specs; all units should be able to approximate these - some will exceed and some may drop slightly below these specs. Limit specs represent the absolute worst condition that still might be considered acceptable; in no case should a unit perform to less than any limit spec.

DISASSEMBLY INSTRUCTIONS

TO REMOVE THE TOP AND BOTTOM COVERS

1. Remove 4 mounting screws Ⓐ from both sides of the unit.
2. Remove 8 screws Ⓑ from both sides of the unit.
3. Pull out the top and bottom case.

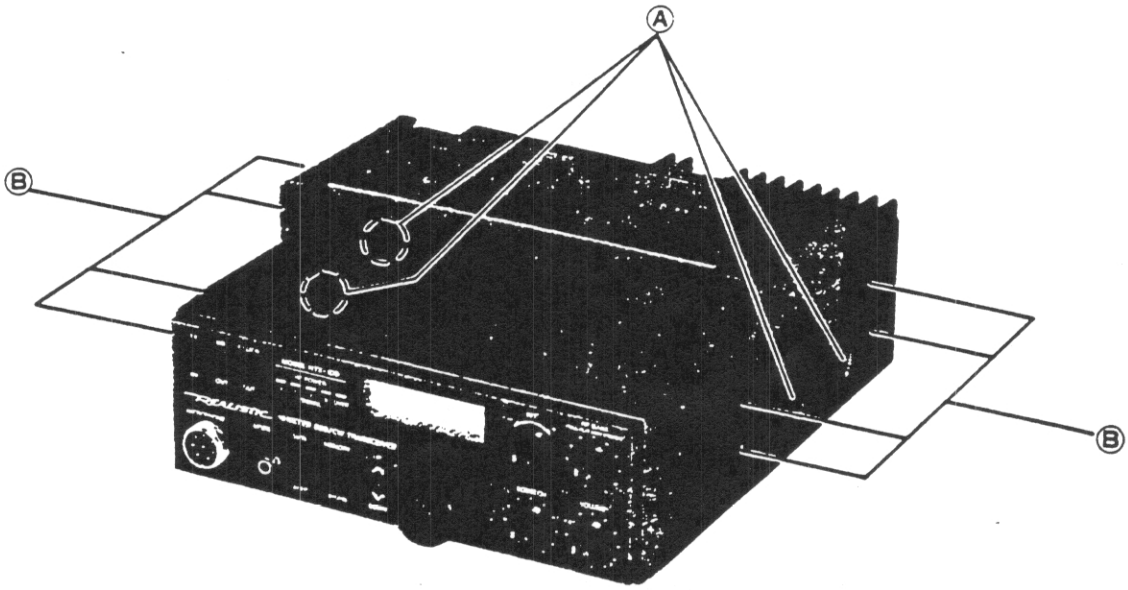

TO REMOVE THE FRONT PANEL

1. Remove 4 screws Ⓒ from both sides of the main chassis.
2. Pull out the volume knob and frequency control knob from the front panel.
3. Pull out the front panel.

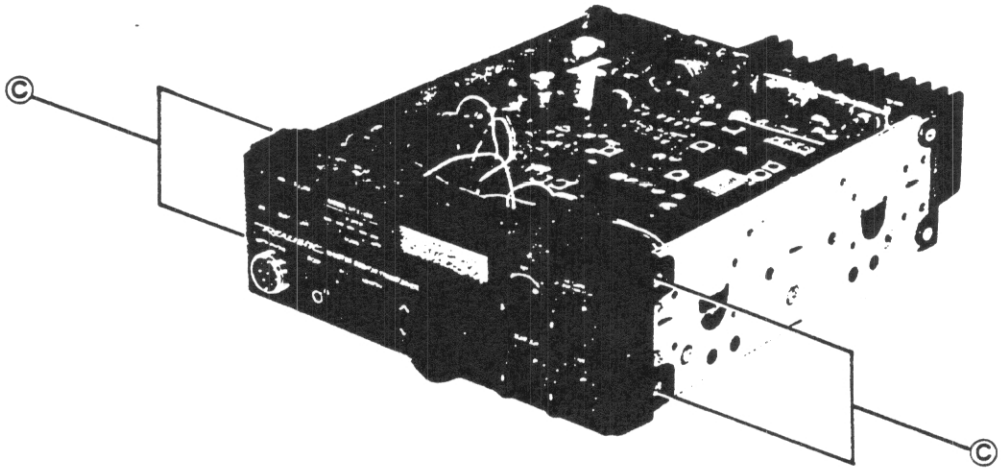

BLOCK DIAGRAM

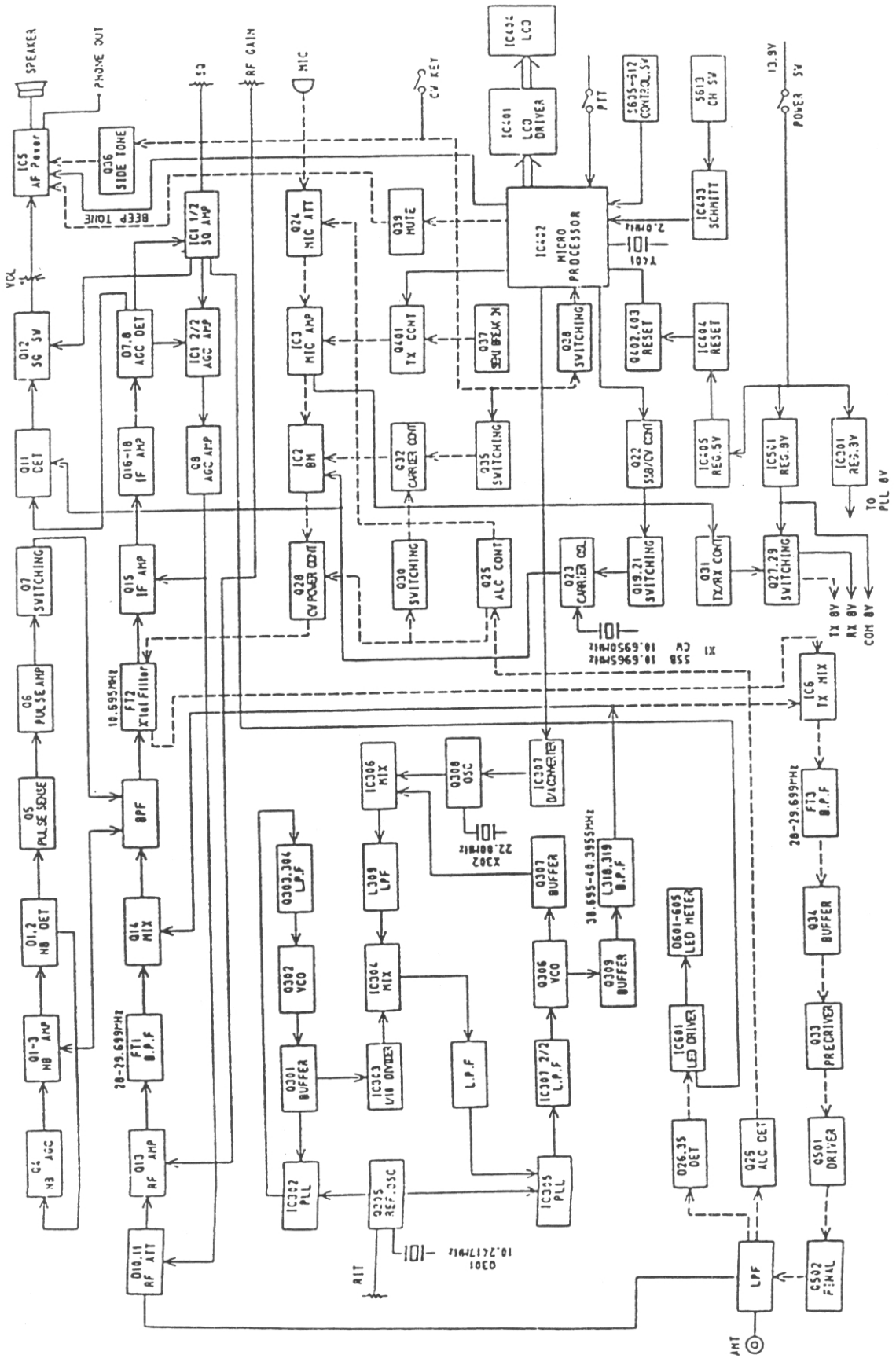

CIRCUIT DESCRIPTION

1. PLL circuit

The PLL circuit used in this model consists of two 10 kHz and 5 kHz reference loops, and in the 5 kHz loop 1 kHz step is obtained by a 1/10 divider. Moreover, by controlling frequency of the VCXO (oscillator) with a microcomputer and a D/A converter, 100 Hz step is obtained.
Theory of operation will be given below.
Q305 is the reference oscillator (10.24 MHz) and supplies the output to two PLL ICs, IC302 and IC305. The Q305 is also used as the RIT circuit which varies the frequency by ±1.5 kHz with the varicap (D303) voltage varied. The reference oscillator signal applied to IC302 and IC305 is counted down to 1/2048 and 1/1024 by the respective divider and then fed to phase comparators. Q302 is a VCO for the 105MHz band and the output enters IC302 in passing through Q301 buffer amplifier. IC302 counts down the input and applies the output to the phase comparator.
The phase comparator output passes a loop filter consisting of Q303 and Q304 and controls Q302 (VCO) frequency.

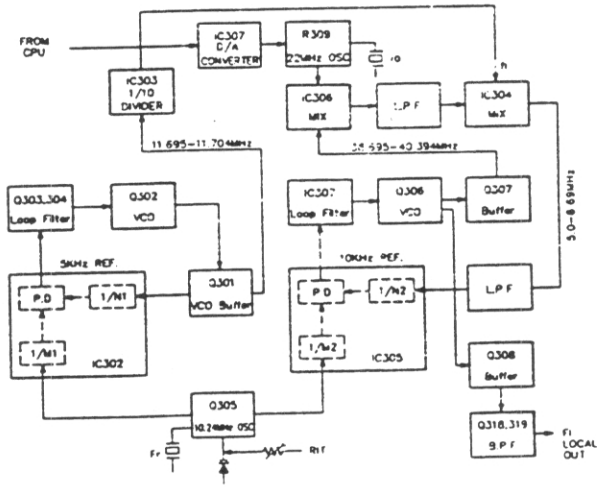

Q301 buffer output is applied to IC303, counted down to 1/10, and then applied to IC304 mixer.
Q309 is a 22MHz oscillator which uses a VXO (Variable Crystal Oscillator) circuit to obtain a 100Hz step operation. The microprocessor develops 6 bit data and the data are converted into a DC voltage by the IC307, D/A converter circuit, and the DC voltage is used as a control voltage for the VXO, thus developing the 100Hz step. The oscillating frequency is 22.0000 — 22.0009MHz (100Hz step). The signal is injected into the IC306 mixer. Q307 output is also injected to the IC306 and the mixed output passes through a LPF and injected to IC304 mixer.
The IC304 mixer output passes through the LPF and enters a divider inside IC305 and applied to the phase comparator with the reference oscillator output.
The phase comparator output passes through IC307 loop filter and controls Q306 (VCO) frequency.
The VCO output passes through Q308 buffer amplifier and BPF (L318, L319) and enters the RX/TX mixer as the local output.
Operations shown above can be given as an equation shown below:

$F1 = (N2/M2)Fr+fo+f1 = Fr(N2/M2+1/10\ N1/M1 + fo/fr)$
where, F1 = Local frequency
Fr = Reference oscillator frequency 10.24 MHz
M1 = 2048
M2 = 1024
N2 = 10 kHz step 500 - 669 (step 1)
N1 = 1 kHz step 23390 - 23408 (step 2) CW
23393 - 23411 (step 2) SSB
fo = 0.1 kHz step 22.0000 MHz - 22.00009 MHz
When the 500kHz key is pushed, the microprocessor computes N1, N2, and fo required to step up by 500kHz from a current frequency and transfers the data to the PLL circuit.

2. Microcomputer peripheral circuits

A 4-bits single chip microcomputer is used with peripheral circuits shown below:

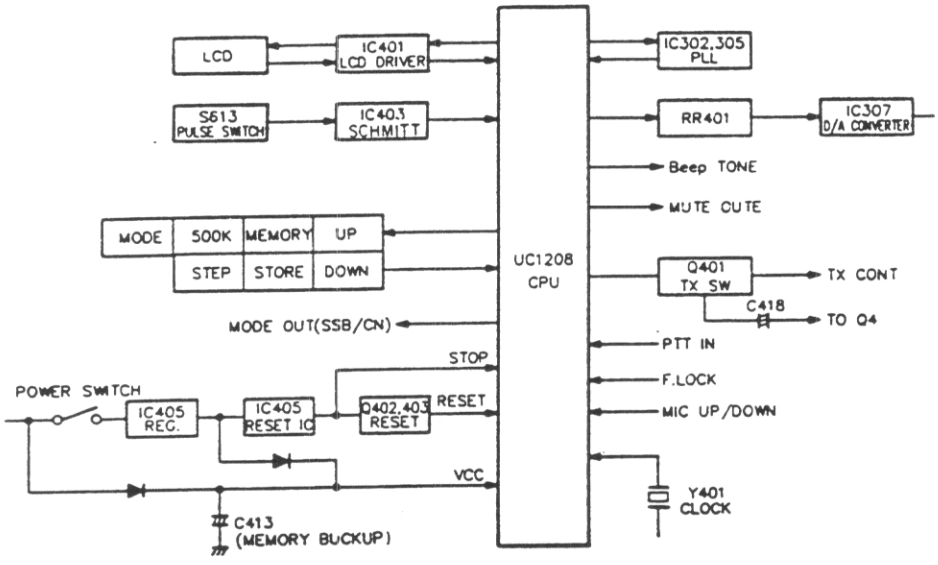

With the power turned on the RESET circuit (IC404, Q402, Q403) operates and allows the microprocessor to transfer PLL data and LCD display data to each IC.
A signal from the pulse switch S613 is waveshaped in IC403 and then applied to the microprocessor to prevent erroneous count operation.
In the transmit mode, PTT IN (pin 41) goes Low level and TX OUT (pin 56) goes Hi level. Then, Q401 operates and the unit enters the TX mode.
In the transmit mode, MUTE output (pin 57) goes Hi level and the AF IC is muted. However, in the CW mode the MUTE output is released, thus outputting the CW monitor sound.
C413 (super capacitor) relates to memory back-up time and holds the memory contents for about 17 months.
Moreover, by connecting a power source to the BATTERY terminal the memory backup will be assured regardless of power switch of the unit.
The KEY matrix consists of seven switches, 3 rows by 3 columns as shown below.

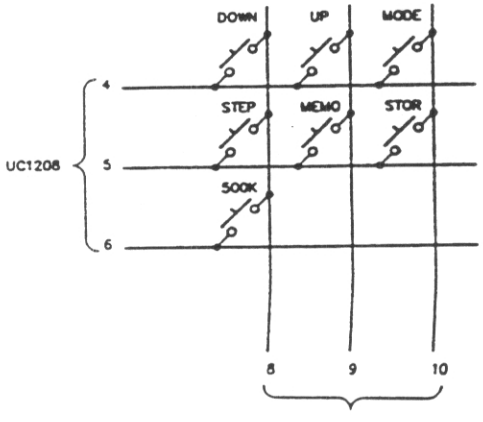

Operation of keys varies voltage level (Hi or Low) on the matrix and with this variation respective function will be actuated (as programmed in the microcomputer). When operating each key, 2 kHz beep tone is generated at pin 27 for 50ms and applied to the AF power amplifier.

ALIGNMENT PROCEDURE

ALIGNMENT OF P.L.L. AND CARRIER OSCILLATOR PORTION

1. Test Equipment Required

DC Power Supply (13.8 V)
Frequency Counter
Dummy Load (50 ohm)
Oscilloscope
DC Voltmeter

2. Preparation for Alignment

F-LOCK : OFF
TX/RX SW : RX
MODE SW : CW
RIT : Middle position

3. Alignment Procedure

Step	Preset to	Adjustment	Remarks
1	Mode: RX, CW S.S.G.: 29 MHz	L 302	Connect a DC voltmeter to TP 301. Adjust L 302 for 4 ±0.1 V reading on the DC voltmeter.
2	Same	L 303	Connect an oscilloscope to TP 302. Adjust L 303 for maximum reading on the oscilloscope.
3	Same	L 313	Connect a frequency counter and the oscilloscope to TP 303. Adjust L 313 for 10.695 MHz ±10 Hz reading on the frequency counter.
4	S.S.G.: 29.699MHz Mode: RX, CW	L 312	Connect the oscilloscope to TP 307. Adjust L 312 for maximum reading on the oscilloscope.
5	Same	L 321	Connect the oscilloscope and the frequency counter to TP 307. Adjust L 321 for 22.0009 MHz ±10 Hz reading on the frequency counter.
6	Same as step 1.	VR 303	Adjust VR 303 for 22.0000 MHz ±10 Hz reading on the frequency counter.
7	Same as step 1.	VR 302	Connect the oscilloscope to TP 305. Adjust VR 302 to obtain the waveform as shown on the Fig. 1.
8	Same as step 1.	VR 301	Connect the oscilloscope to TP 306. Adjust VR 301 to obtain the waveform as shown on the Fig. 1.
9	Same as step 4.	L 317	Connect the DC voltmeter to TP 303. Adjust L 317 for 5.5 V ±0.1V reading on the DC voltmeter.
10	Same as step 7.	No alignment	Connect the DC voltmeter to TP 303. Check if voltage is more than 3 V at TP 303.
11	Same as step 1.	L 321	Connect the oscilloscope and the frequency counter to TP304. Adjust L 321 for 38.695 MHz ±20 Hz reading on the frequency counter.

3. Alignment Procedure (Cont.)

Step	Preset to	Adjustment	Remarks
12	Mode: TX, CW S.S.G.: 29 MHz	VR 304	Connect the oscilloscope and the frequency counter to TP 304. Adjust VR 304 for 38.695 MHz ±20 Hz reading on the frequency counter.
13	Mode: RX, CW S.S.G.: 29 MHz	No alignment	Connect the oscilloscope and the frequency counter to TP 301. Check if the frequency is 38.695 MHz ±1.0 - ±2.0 kHz when turn the RIT volume to fully clockwise from fully counterclockwise.

4. Test Equipment Connection

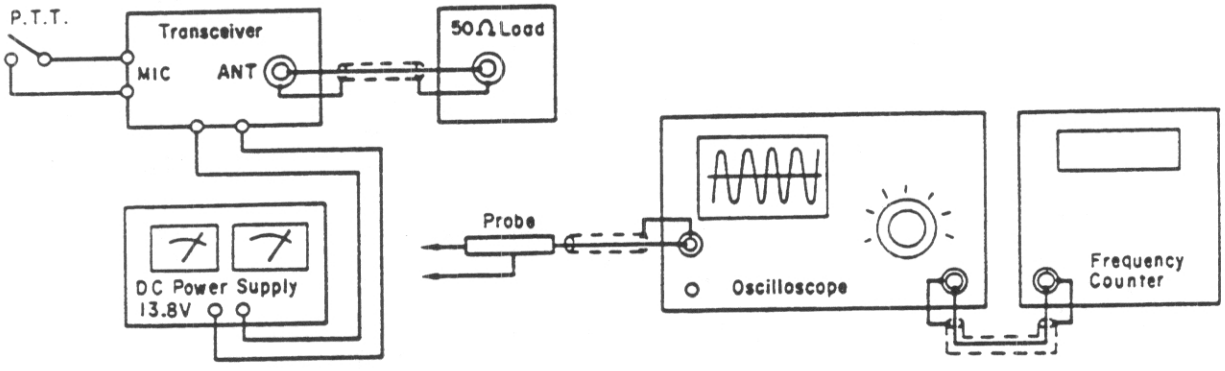

ALIGNMENT OF TRANSMITTER PORTION

1. Test Equipment Required

DC Power Supply (13.8 V) more than 10 A
AF Signal generators (Two required)
RF SSVM
DC Ampere Meter
AF SSVM
Key Switch
Oscilloscope 1, 2
RF Power Meter
Dummy Load (50 ohm and 8 ohm)

2. Preparation for Alignment

VR 5, 6 : Counterclockwise
VR 12 : Clockwise
FREQUENCY : 29.000 MHz
VR 11 : Counterclockwise
TX/RX SW : RX

3. Alignment Procedure

Step	Preset to	Adjustment	Remarks
1	Mode: SSB No modulation	VR 12	Remove the B001 (PB-100) from Main PCB. Connect a DC Ampere meter (+) to TP 6, (−) to TP 5. Adjust VR 11 for 50 mA reading on the DC Ampere meter.
2	Same	VR 11	Connect the DC Ampere meter (+) to TP 6, (−) to TP 4. Adjust VR 12 for 50 mA reading on the DC Ampere Meter.
3	OSC 1: 500 Hz OSC 2: 2400 Hz S1, S2: ON Mode:SSB	L 26	Disconnect the DC Ampere meter. Reinstall the B001 to the Main PCB. Connect a RF Power meter to the Antenna jack and then, connect a RF SSVM, an oscilloscope across a RF dummy load to the RF power meter. Adjust L 26 for maximum reading on the RF SSVM. During this step, set the AF S.G. so that the output is less than 20 Vp-p. Repeat this step two times.
4	Same	VR 5	Adjust level of OSC 1 and OSC 2 for 30 mV reading on the AF SSVM, then adjust VR 5 for 36 Vp-p reading on the oscilloscope.
5	Pull RF Gain Control (Low Power)	VR 6	Adjust level of OSC 1 and OSC 2 for 30 mV reading on the AF SSVM, then adjust VR 6 for 16 Vp-p reading on the oscilloscope.
6	OSC 1, OSC 2: OFF	VR 4	Adjust VR 4 so that the carrier leakage at SSB and CW become minimum and almost equal.
7	Same as step 3.	VR 9	Adjust level of OSC 1 and OSC 2 for 30 mV reading on the AF SSVM, then adjust VR 9 so that "9" LED just lights on.
8	Mode: CW No modulation	VR 13	Connect an AF SSVM across a dummy load (8 ohm) to EXT jack. Connect a key switch to the Key jack. With Key switch ON, adjust VR 13 for 0.2 V reading on the AF SSVM.

Step	Preset to	Adjustment	Remarks
9	Mode: CW KEY SW: ON	No alignment	Check if the RF power level is 23 ∿ 29 W reading on the RF power meter.
10	Mode: CW (Low Power) Pull RF Gain Control	No alignment	Check if the RF power level is 3 ∿ 7 W reading on the RF power meter.

4. TEST EQUIPMENT CONNECTION

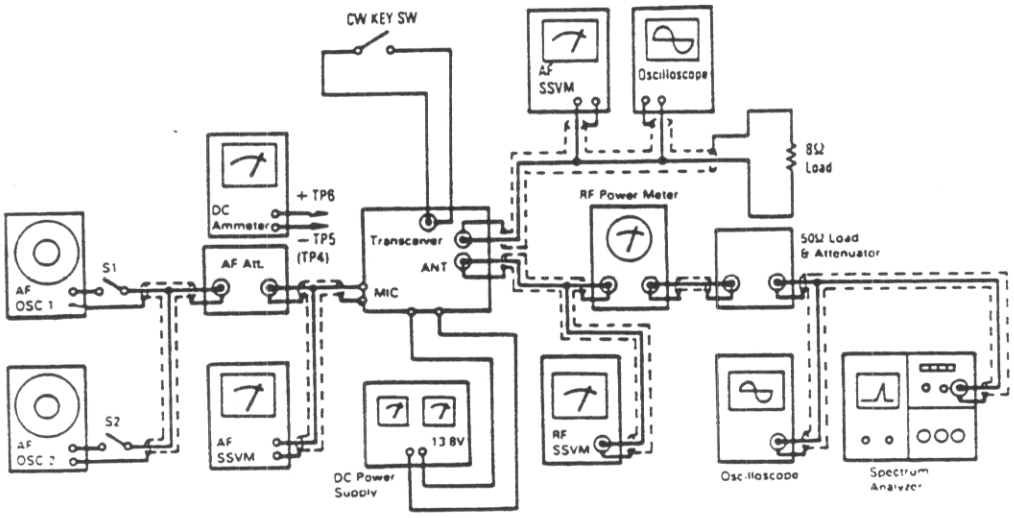

Connection for Transmitter Alignment

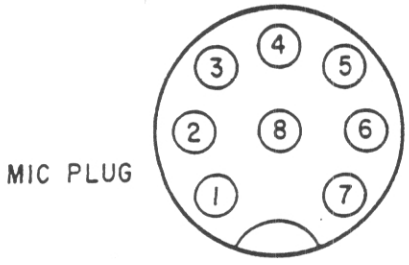

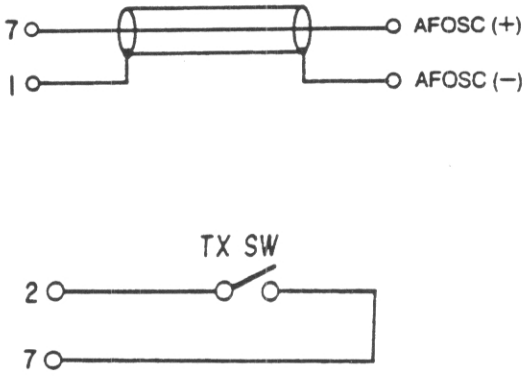

ALIGNMENT OF RECEIVER PORTION

1. Test Equipment Required

AF SSVM
Oscilloscope
Standard Signal Generator (29.000 MHz, and 50 ohm Impedance)
DC Power Supply (13.8 V)
Dummy Load (8 ohm)
Noise Generator

2. Preparation for Alignment

NB SW	: OFF	MODE SW	: SSB
Squelch	: Min.	RF Gain	: MAX
VOLUME	: MAX	TX/RX SW	: RX
RIT	: Middle position		

3. Alignment Procedure

Step	Preset to	Adjustment	Remarks
1		L 2 ∿ L 5 L 7 and L 8	**Alignment for sensitivity** Adjust coils for maximum reading on the AF SSVM. (During this step, set the Standard Signal Generator attenuator so that the standard output is less than 0.5 W (2 V/8 ohm).)
2	Squelch: Fully clockwise	VR 2	**Alignment for Squelch** Set the output of Standard Signal Generator to 1 mV and squelch to maximum. Adjust VR 2 so that the squelch just breaks.
3		VR 1	**Alignment for S-Meter** Set the output of Standard Signal Generator to 100 μV, no modulation. Adjust VR 1 so that "9" LED just lights on.
4	NB: ON	L 1	Set the level of S.S.G. to approx. 2μV, then adjust L1 for maximum reading on the oscilloscope. Connect the oscilloscope to TP 1.

TEST EQUIPMENT CONNECTION

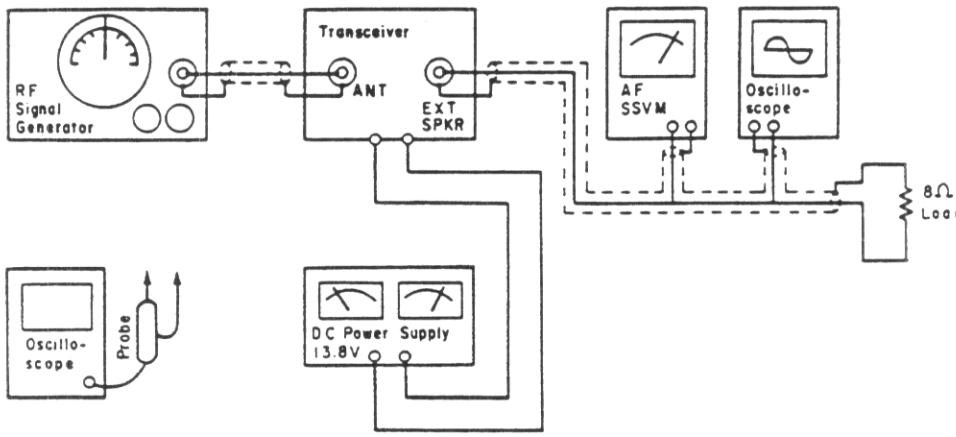

ALIGNMENT POINT LOCATIONS

Main PCB

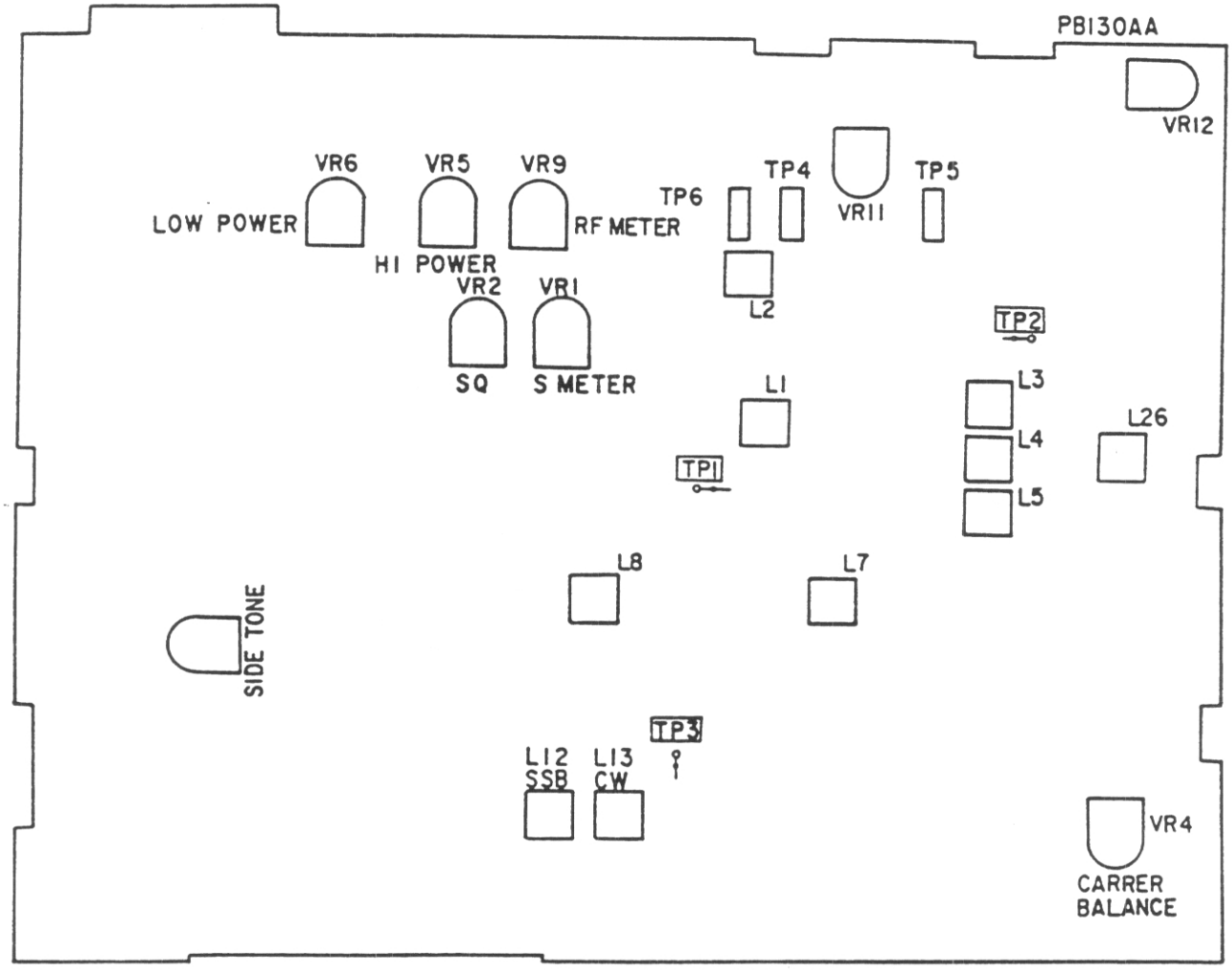

PLL PCB

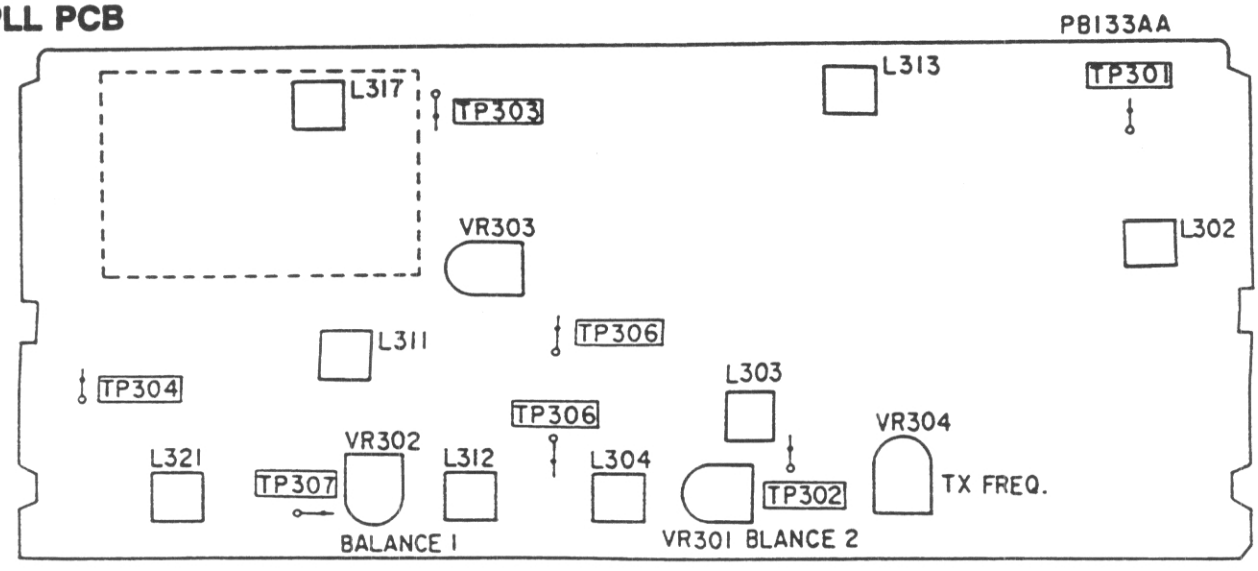

TROUBLESHOOTING HINTS

Note: Refer to the transistor voltage chart and the IC voltage chart for the IC and transistor terminal voltages.

TRANSMITTER SECTION

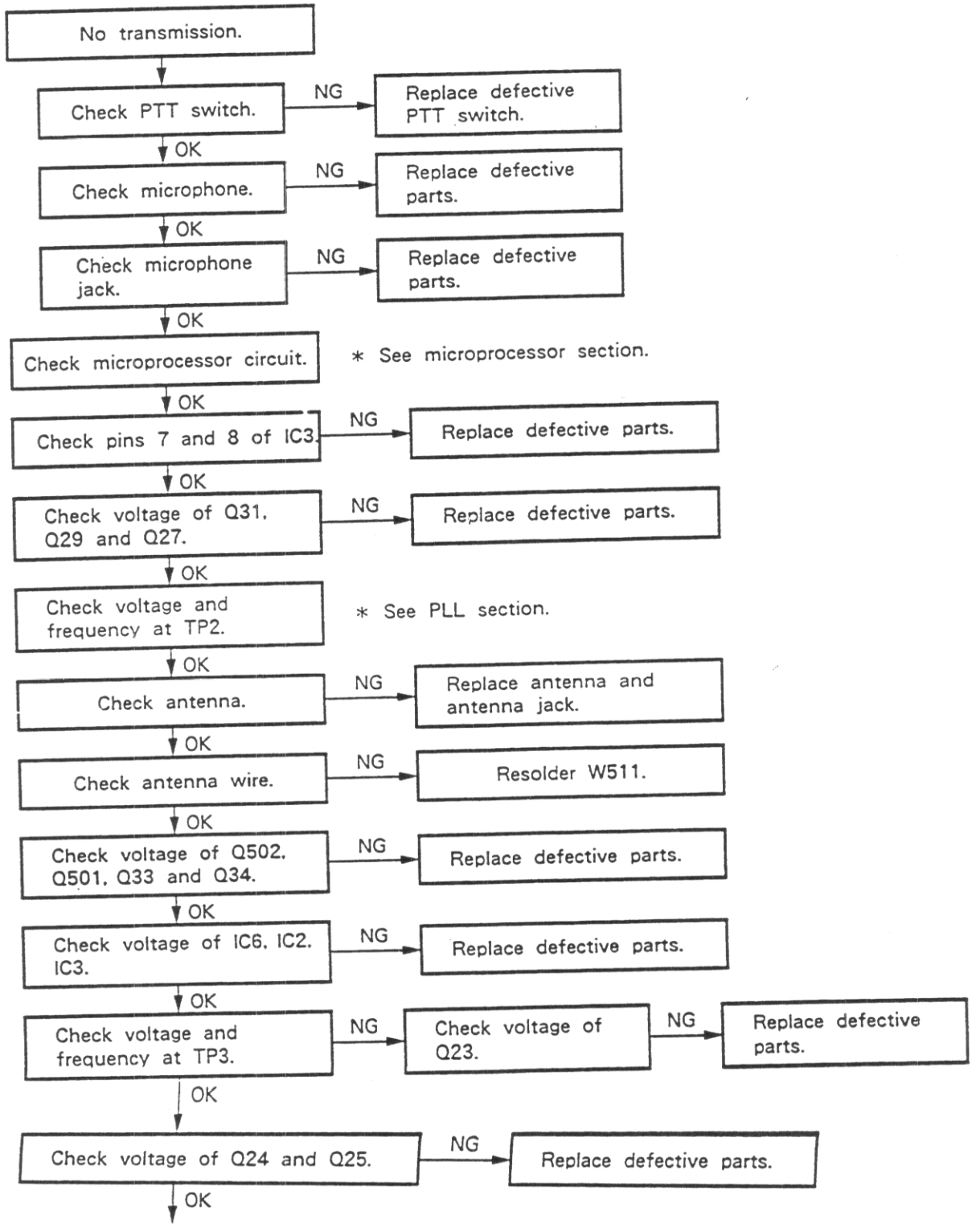

RECEIVER SECTION

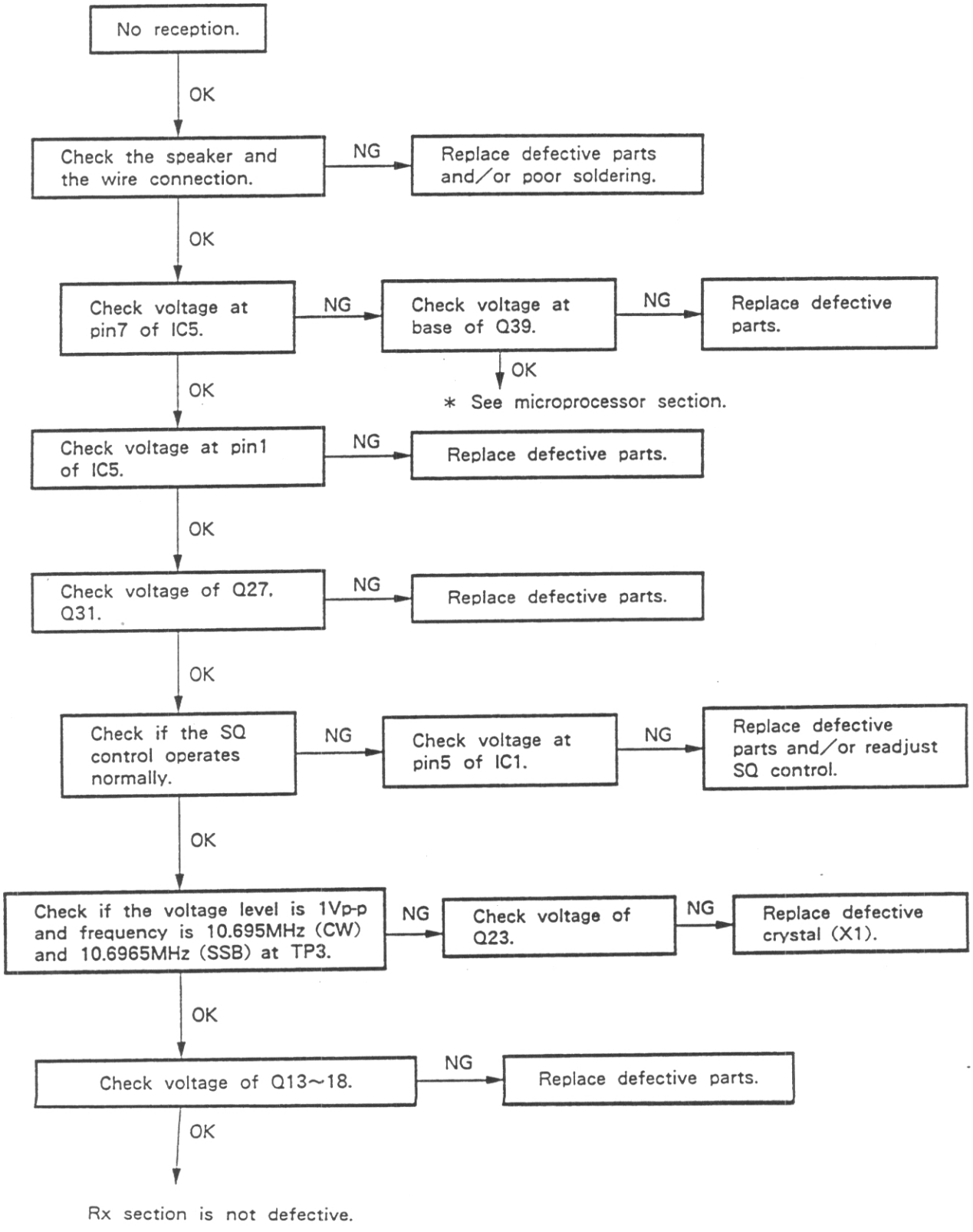

PLL SECTION

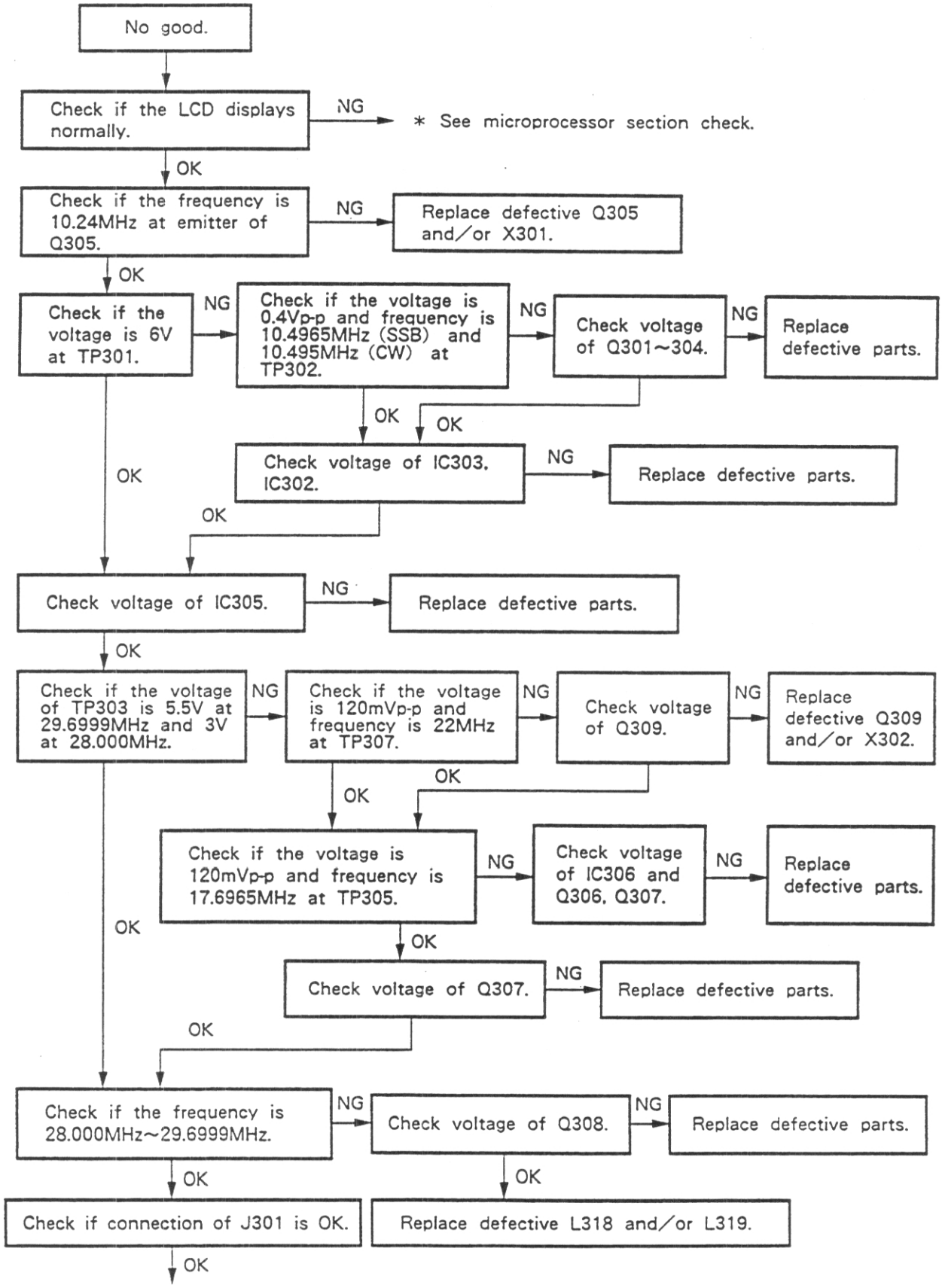
No good.
Check if the LCD displays normally.
NG
* See microprocessor section check.
OK
Check if the frequency is 10.24MHz at emitter of Q305.
NG
Replace defective Q305 and/or X301.
OK
Check if the voltage is 6V at TP301.
NG
Check if the voltage is 0.4Vp-p and frequency is 10.4965MHz (SSB) and 10.495MHz (CW) at TP302.
NG
Check voltage of Q301~304.
NG
Replace defective parts.
OK
OK
OK
Check voltage of IC303, IC302.
NG
Replace defective parts.
OK
Check voltage of IC305.
NG
Replace defective parts.
OK
Check if the voltage of TP303 is 5.5V at 29.6999MHz and 3V at 28.000MHz.
NG
Check if the voltage is 120mVp-p and frequency is 22MHz at TP307.
NG
Check voltage of Q309.
NG
Replace defective Q309 and/or X302.
OK
OK
Check if the voltage is 120mVp-p and frequency is 17.6965MHz at TP305.
NG
Check voltage of IC306 and Q306, Q307.
NG
Replace defective parts.
OK
OK
Check voltage of Q307.
NG
Replace defective parts.
OK
Check if the frequency is 28.000MHz~29.6999MHz.
NG
Check voltage of Q308.
NG
Replace defective parts.
OK
OK
Check if connection of J301 is OK.
Replace defective L318 and/or L319.
OK
PLL section is not defective.

MICROPROCESSOR SECTION

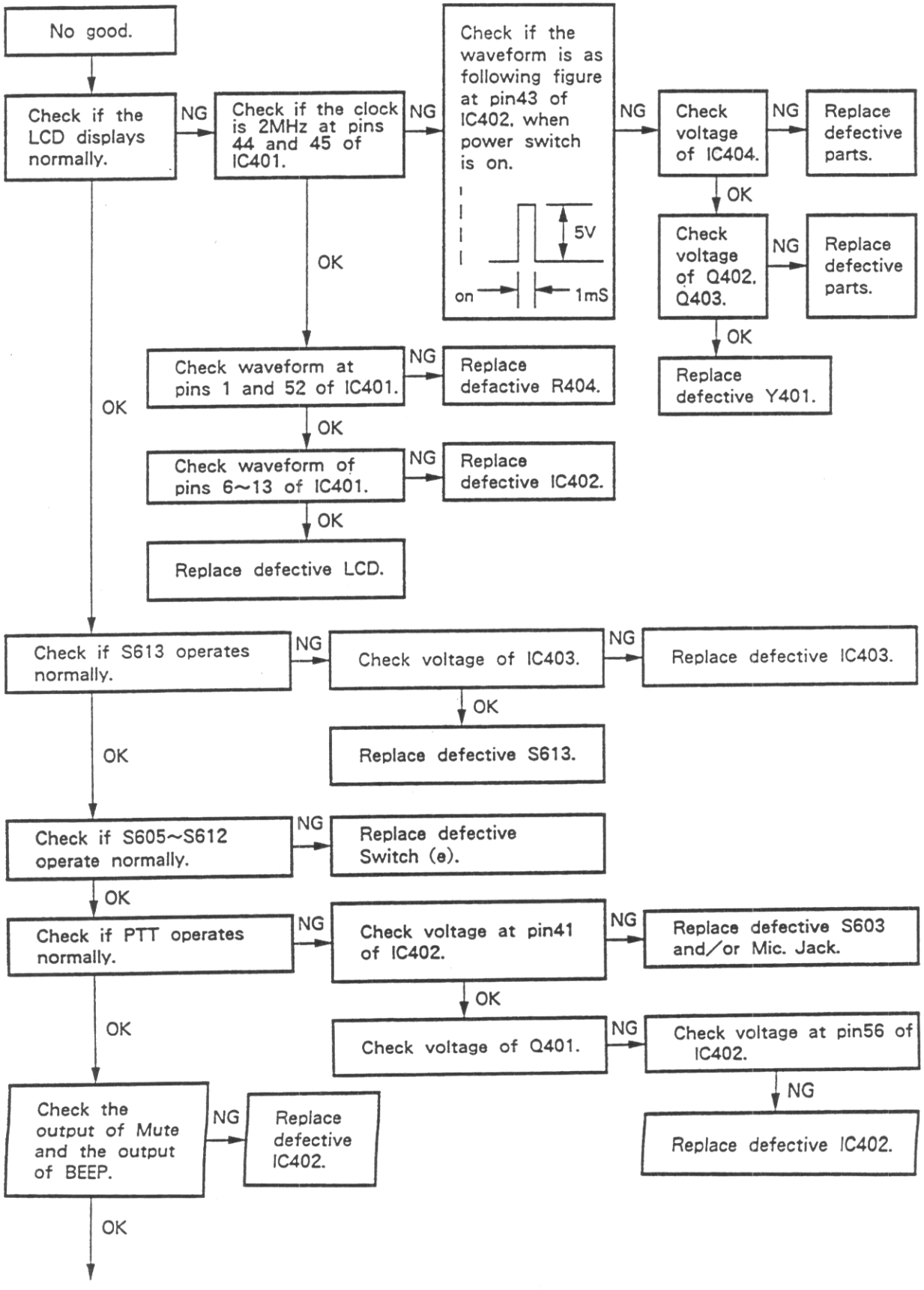

Microprocessor section is not defective.

PCB (Top and Bottom) VIEWS

Main PCB (Top View)

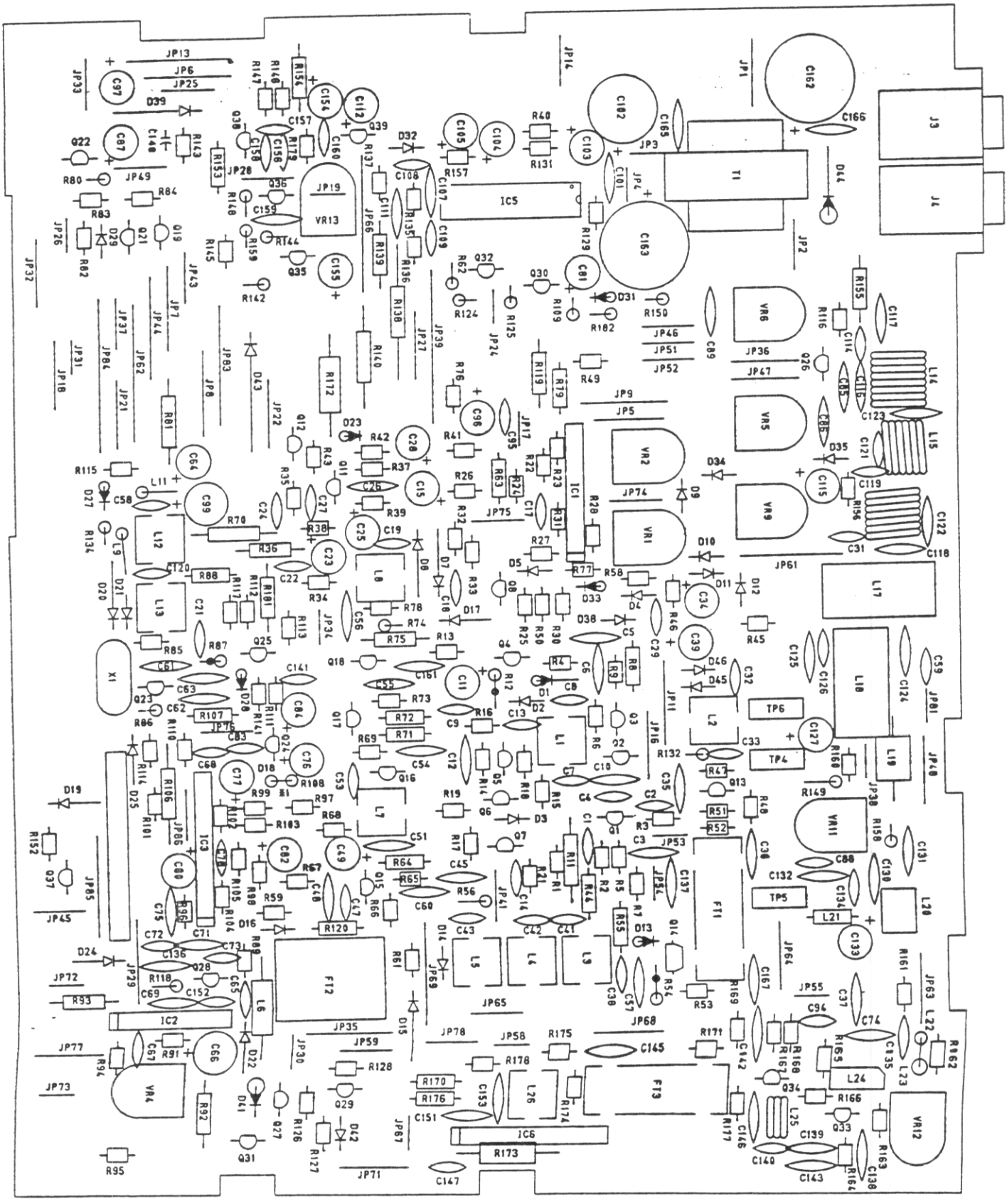

Main PCB (Bottom View)

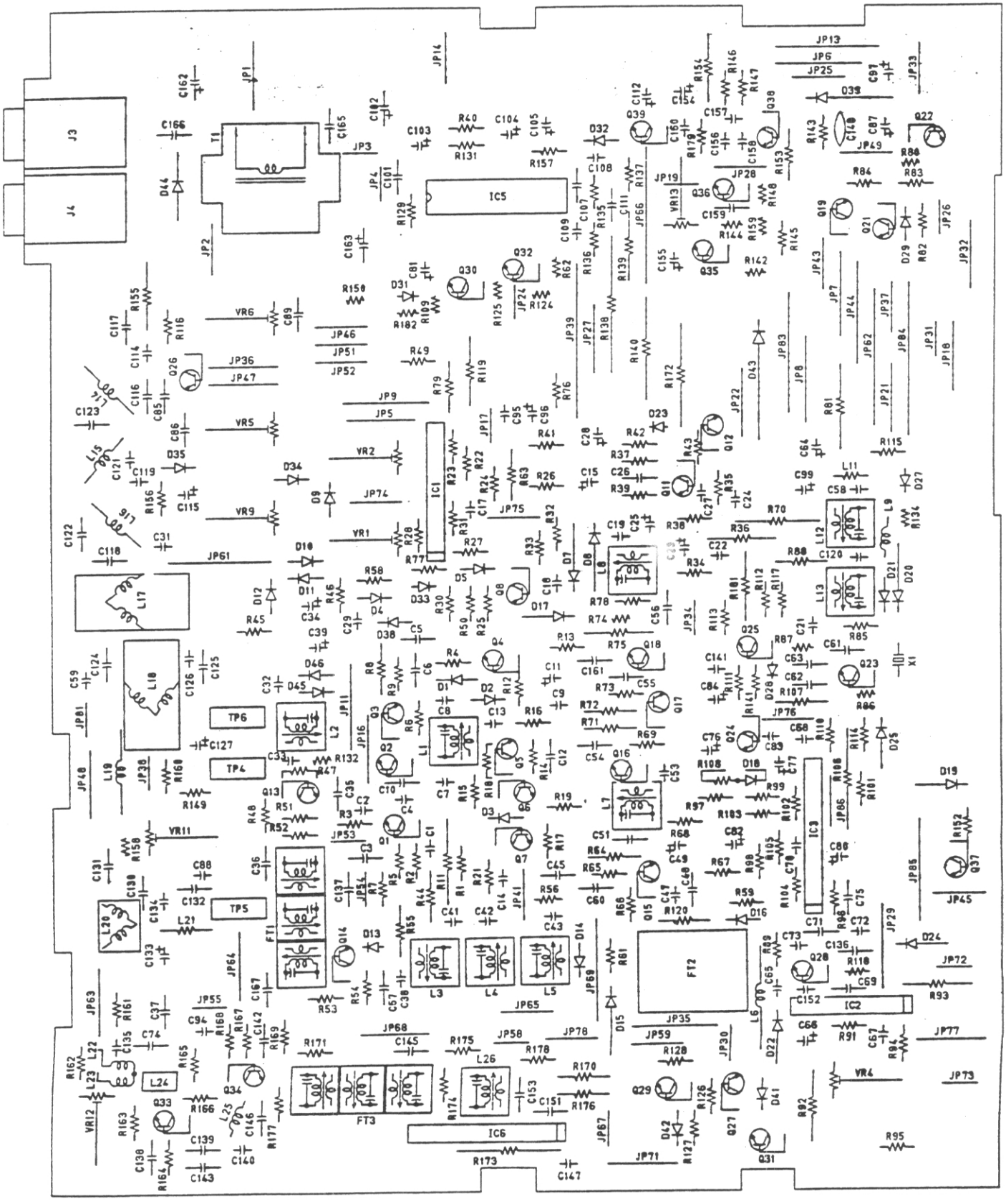

Front PCB (Top View)

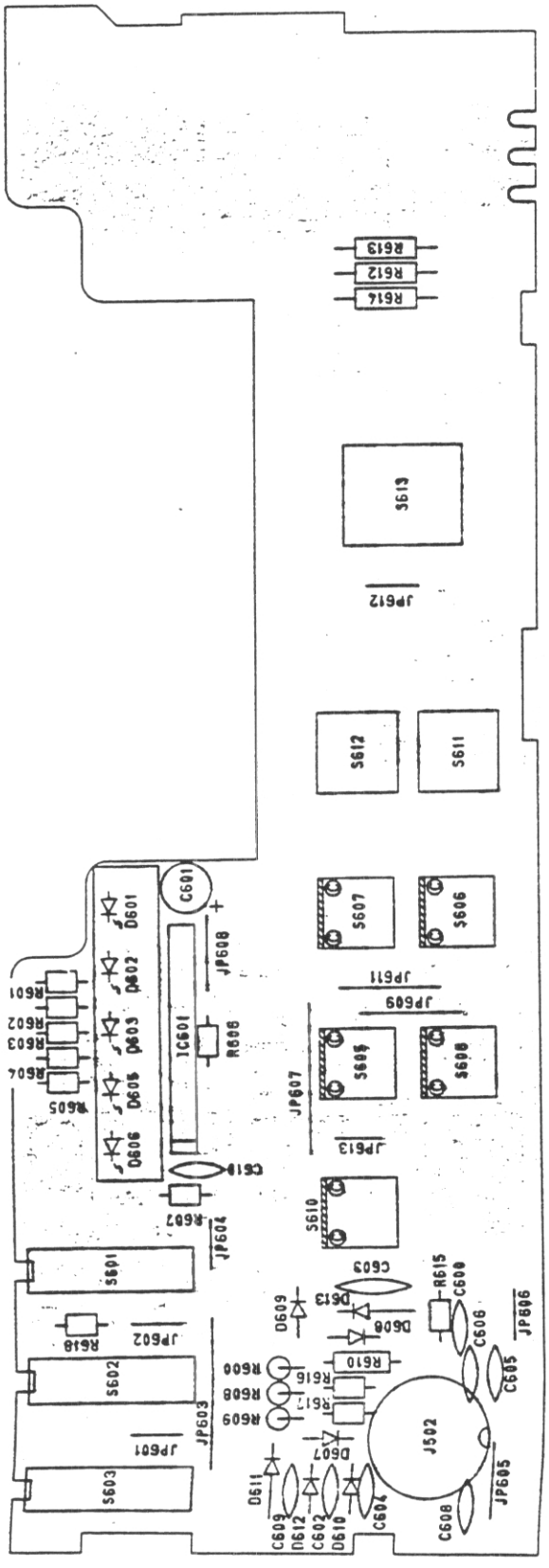

Front PCB (Bottom View)

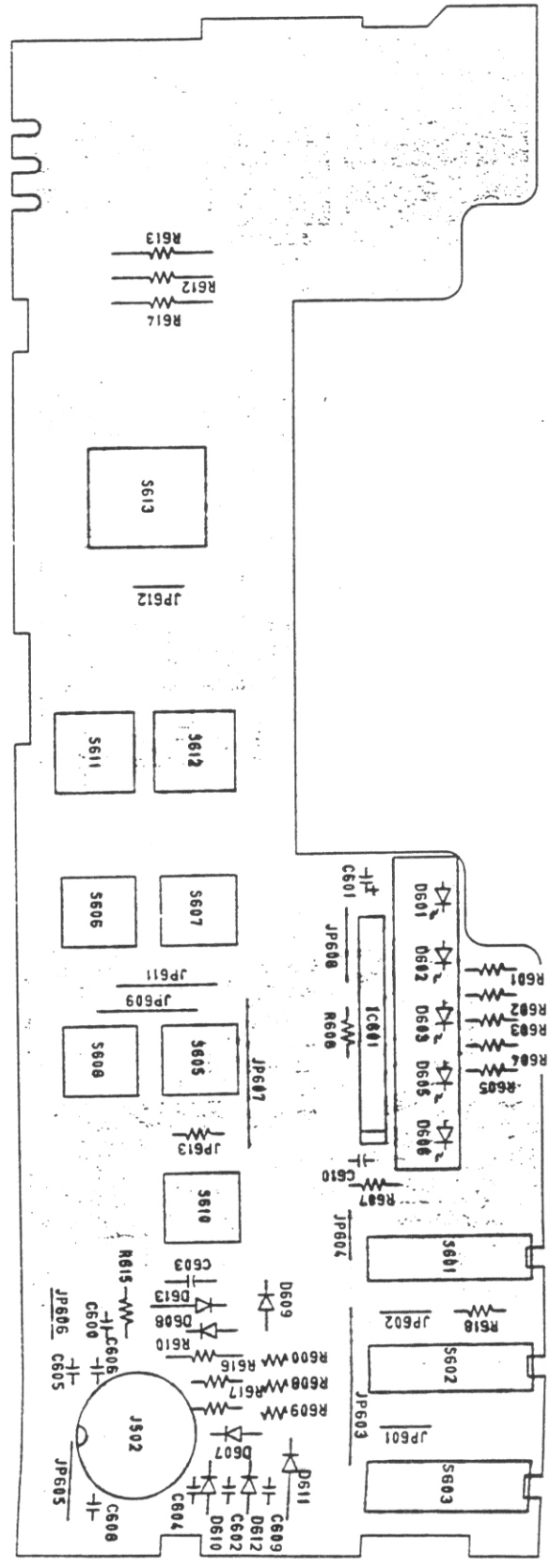

PLL PCB (Top View)

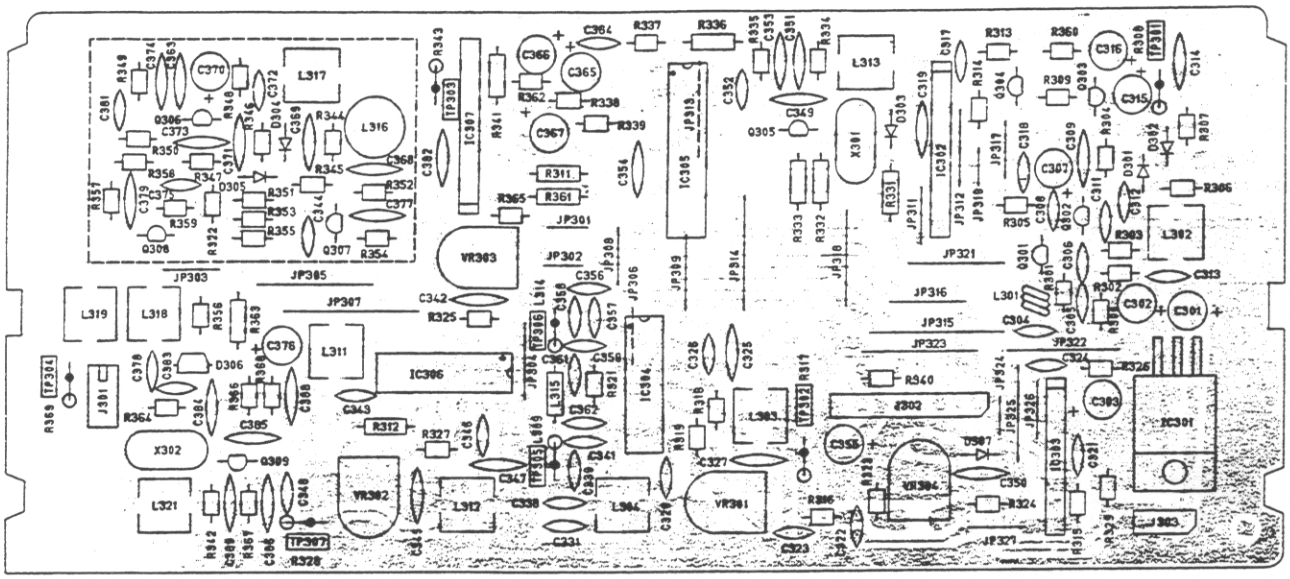

Microprocessor PCB (Top and Bottom View)

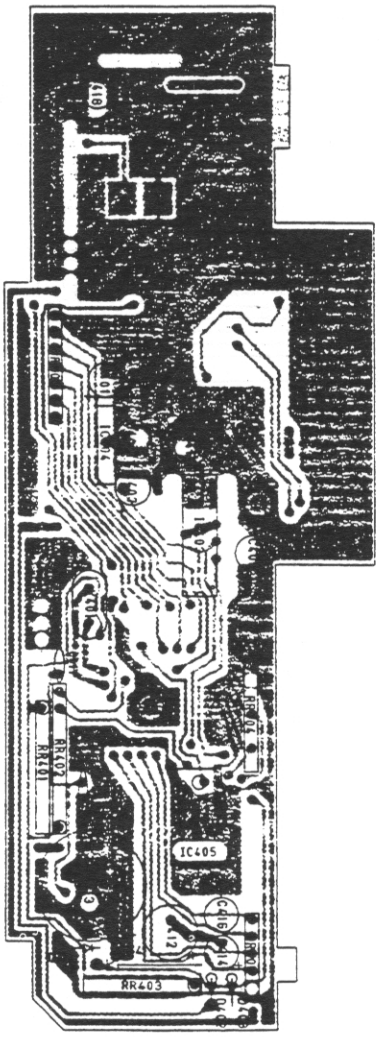

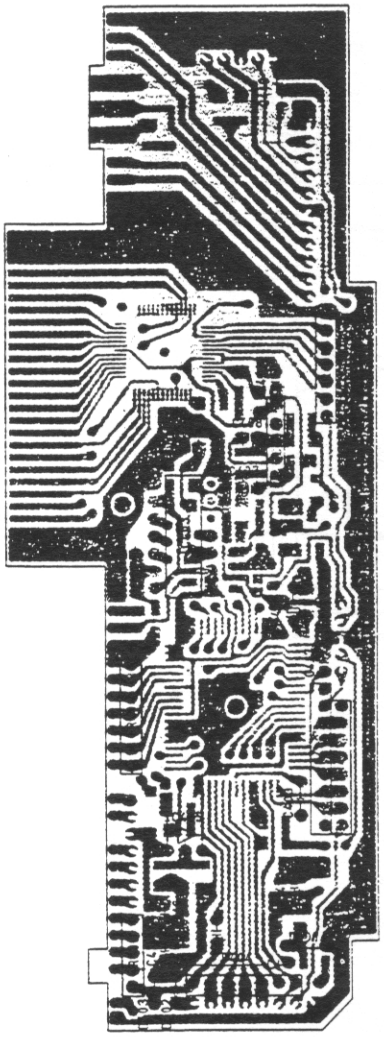

PLL PCB (Bottom View)

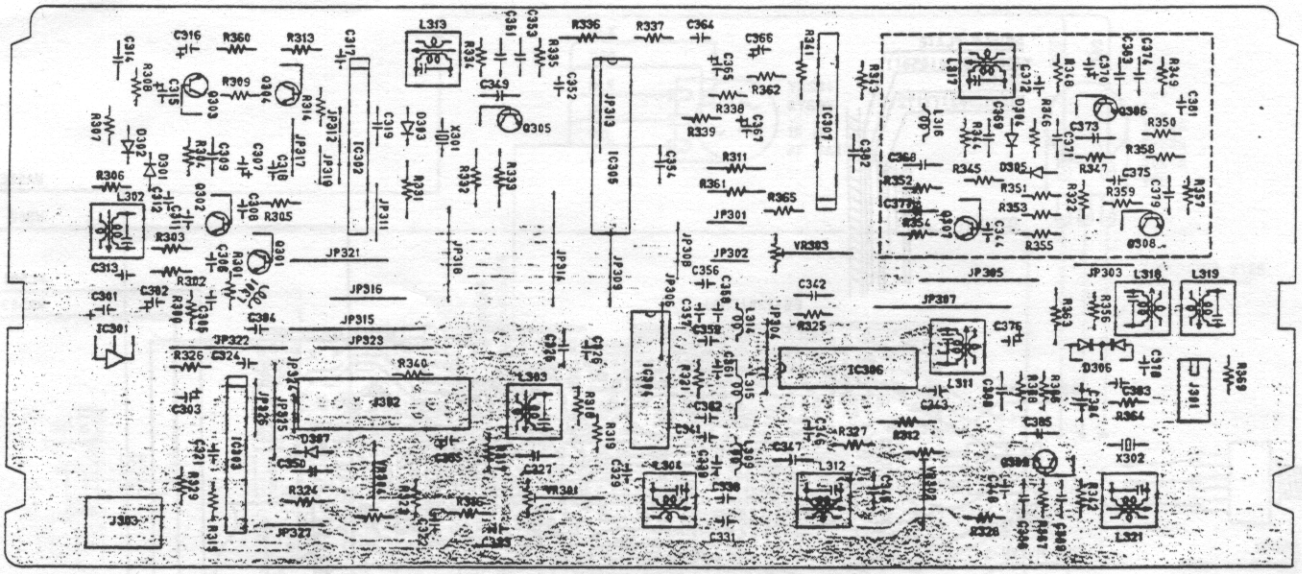

Chip Parts Locations (Bottom View)

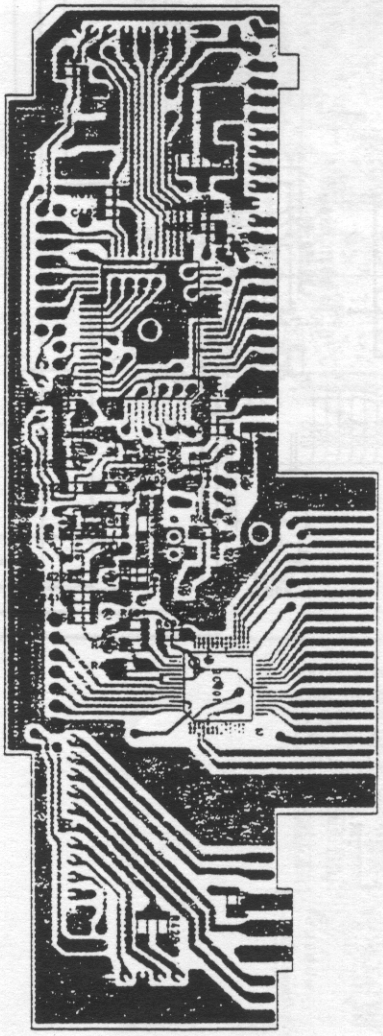

WIRING

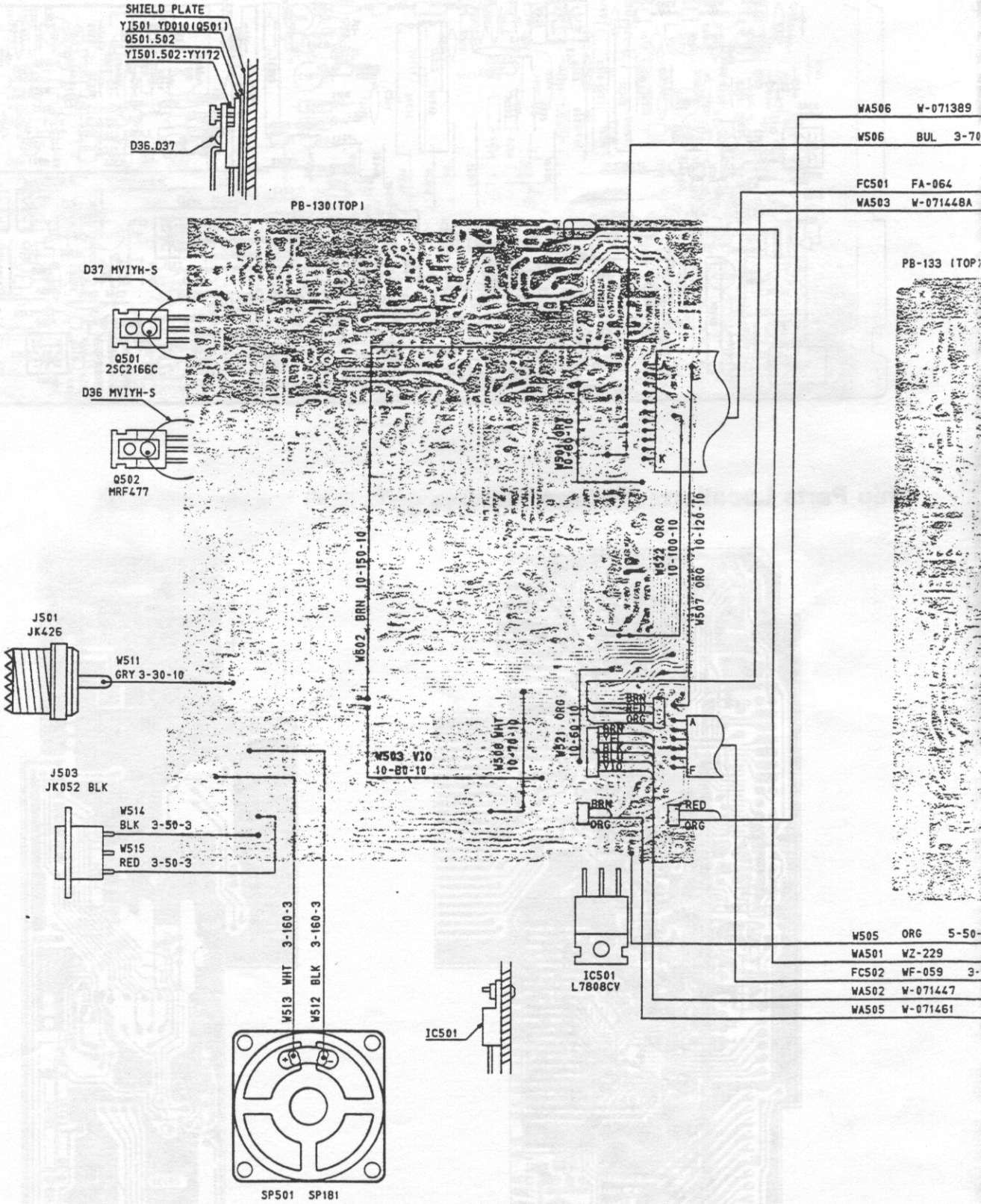
SHIELD PLATE
YI501 YD010(Q501)
Q501.502
YI501.502:YY172
D36.D37
PB-130(TOP)
D37 MVIYH-S
Q501
2SC2166C
D36 MVIYH-S
Q502
MRF477
J501
JK426
W511
GRY 3-30-10
J503
JK052 BLK
W514
BLK 3-50-3
W515
RED 3-50-3
W513 WHT 3-160-3
W512 BLK 3-160-3
SP501 SP181
IC501
IC501
L7808CV
W502 BRN 10-150-10
W501 ORY 10-80-10
W522 ORG 10-100-10
W507 ORG 10-120-10
W503 VIO 10-80-10
W508 WHT 10-70-10
W521 ORG 10-60-10
BRN
RED
ORG
BRN
WHT
BLK
VIO
BRN
ORG
RED
ORG
WA506 W-071389
W506 BUL 3-70
FC501 FA-064
WA503 W-071448A
PB-133 (TOP)
W505 ORG 5-50-
WA501 WZ-229
FC502 WF-059 3-
WA502 W-071447
WA505 W-071461

G DIAGRAM

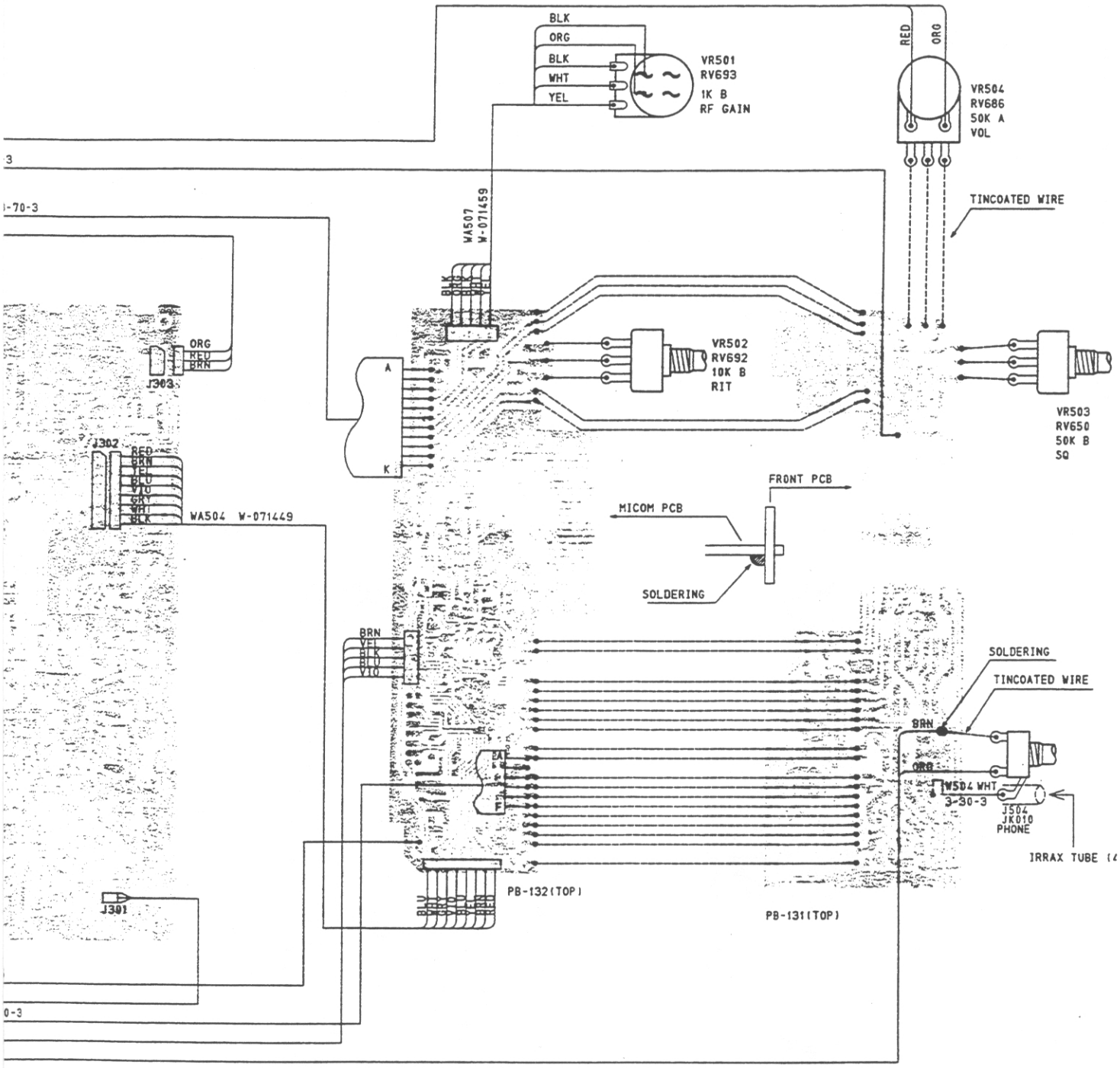
BLK
ORG
BLK
WHT
YEL
VR501
RV693
1K B
RF GAIN
RED
ORG
VR504
RV686
50K A
VOL
TINCOATED WIRE
WA507
W-071459
VR502
RV692
10K B
RIT
VR503
RV650
50K B
SQ
ORG
RED
BRN
J303
J302
WA504 W-071449
FRONT PCB
MICOM PCB
SOLDERING
SOLDERING
TINCOATED WIRE
BRN
ORG
WA504 WHT
3-30-3
J504
JK010
PHONE
IRRAX TUBE
PB-132(TOP)
PB-131(TOP)
J301

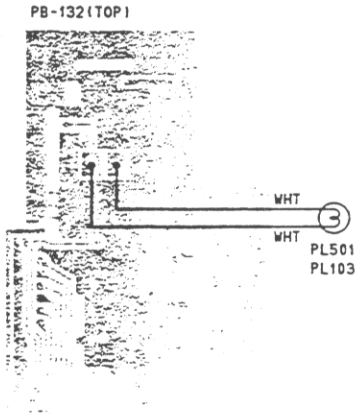
PB-132(TOP)
WHT
WHT
PL501
PL103

ELECTRICAL PARTS LIST

MAIN PCB ASS'Y

REF. NO.	DESCRIPTION	RS PART NO.	MFR'S PART NO.
	ASSEMBLY, PCB, MAIN Consists of the following:		AT553ZTBEA
PC BOARD			
B001	PC BOARD MAIN PB-130AA		BPBY0130AAZ
CAPACITORS			
The following codes indicate variations of capacitors against temperatures; **YA** = ±5%, **YB** = ±10%, **YD** = +20 −30%, **YE** = +20 −50% (−25 ∼ +85°C), **ZF** = +30 −80% (−10 ∼ +70°C), **CH** = 0 ± 60ppm/°C, **RH** = 220ppm/°C ± 60ppm/°C, **TH** = −470ppm/°C ± 60ppm/°C, **SL** = +350ppm/°C ∼ −1000ppm/°C, **UJ** = −750ppm/°C ± 120ppm/°C			
C001	Ceramic 4 pF 50 V ±0.25% SL		BCCG814091Z
C002	Ceramic 0.0047 μF 50 V +80/−20% YF(F)		BCKG814720Z
C003	Semi-conductor (SR) 0.047 μF 25 V ±10%		BCGC514735Z
C004	Ceramic 22 pF 50 V ±10% SL		BCCG812205Z
C005	Semi-conductor (SR) 0.022 μF 25 V ±10%		BCGC512235Z
C006	Semi-conductor (SR) 0.047 μF 25 V ±10%		BCGC514735Z
C007	Ceramic 0.0047 μF 50 V +80/−20% YF(F)		BCKG814720Z
C008	Ceramic 0.001 μF 50 V ±20% YD(D)		BCKD811026Z
C009	Ceramic 82 pF 50 V ±10% SL		BCCG818205Z
C010	Ceramic 0.01 μF 50 V +80/−20% YF(F)		BCKG811030Z
C011	Electrolytic 0.47 μF 50 V +80/−20%		BCEL814780Z
C012	Ceramic 330 pF 50 V ±10% SL		BCCG813315Z
C013	Ceramic 0.001 μF 50 V ±20% YD(D)		BCKD811026Z
C014	Ceramic 0.001 μF 50 V ±20% YD(D)		BCKD811026Z
C015	Electrolytic 100 μF 10 V +80/−20%		BCEL111010Z
C016	— Not Used —		
C017	Semi-conductor (SR) 0.01 μF 25 V ±10%		BCGC511035Z
C018	Ceramic 0.001 μF 50 V ±20% YD(D)		BCKD811026Z
C019	Ceramic 39 pF 50 V ±10% SL		BCCG813905Z
C020	— Not Used —		
C021	Ceramic 39 pF 50 V ±10% SL		BCCG813905Z
C022	Ceramic 10 pF 50 V ±0.5% SL		BCCG811002Z
C023	Electrolytic 47 μF 10 V +80/−20%		BCEL114700Z
C024	Semi-conductor (SR) 0.001 μF 25 V ±10%		BCGC511025Z
C025	Electrolytic 22 μF 10 V +80/−20%		BCEL112200Z
C026	Semi-conductor (SR) 0.012 μF 25 V ±10%		BCGC511235Z
C027	Semi-conductor (SR) 0.0033 μF 25 V ±10%		BCGC513325Z
C028	Electrolytic 22 μF 10 V +80/−20%		BCEL112200Z
C029	Ceramic 0.0047 μF 50 V +80/−20% YF(F)		BCKG814720Z
C030	— Not Used —		
C031	Ceramic 27 pF 50 V ±10% SL		BCCG812705Z
C032	Ceramic 0.001 μF 50 V ±20% YD(D)		BCKD811026Z
C033	Ceramic 0.001 μF 50 V ±20% YD(D)		BCKD811026Z

REF. NO.	DESCRIPTION		RS PART NO.	MFR'S PART NO.
C034	Electrolytic	47 μF 10 V +80/−20%		BCEL114700Z
C035	Ceramic	0.01 μF 50 V +80/−20% YF(F)		BCKG811030Z
C036	Ceramic	0.01 μF 50 V +80/−20% YF(F)		BCKG811030Z
C037	Ceramic	0.01 μF 50 V ±20% YD(D)		BCKD811036Z
C038	Ceramic	0.0047 μF 50 V +80/−20% YF(F)		BCKG814720Z
C039	Electrolytic	100 μF 10 V +80/−20%		BCEL111010Z
C040	— Not Used —			
C041	Ceramic	3 pF 50 V ±0.25% SL		BCCG813091Z
C042	Ceramic	3 pF 50 V ±0.25% SL		BCCG813091Z
C043	Ceramic	0.0047 μF 50 V +80/−20% YF(F)		BCKG814720Z
C044	— Not Used —			
C045	Semi-conductor (SR)	0.047 μF 25 V ±10%		BCGC514735Z
C046	— Not Used —			
C047	Semi-conductor (SR)	0.01 μF 25 V ±10%		BCGC511035Z
C048	Semi-conductor (SR)	0.047 μF 25 V ±10%		BCGC514735Z
C049	Electrolytic	10 μF 16 V +80/−20%		BCEL311000Z
C050	— Not Used —			
C051	Semi-conductor (SR)	0.047 μF 25 V ±10%		BCGC514735Z
C052	— Not Used —			
C053	Ceramic	100 pF 50 V ±10% SL		BCCG811015Z
C054	Semi-conductor (SR)	0.047 μF 25 V ±10%		BCGC514735Z
C055	Ceramic	0.047 μF 25 V +80/−20% ZF		BCKC514730Z
C056	Semi-conductor (SR)	0.047 μF 25 V ±10%		BCGC514735Z
C057	Ceramic	0.01 μF 50 V +80/−20% YF(F)		BCKG811030Z
C058	Ceramic	12 pF 50 V ±5% RH		BCCR811204Z
C059	Ceramic	33 pF 50 V ±5% RH		BCCR813304Z
C060	Semi-conductor (SR)	0.047 μF 25 V ±10%		BCGC514735Z
C061	Ceramic	270 pF 50 V ±10% SL		BCCG812715Z
C062	Ceramic	0.01 μF 50 V +80/−20% YF(F)		BCKG811030Z
C063	Ceramic	180 pF 50 V ±5% CH		BCCC811814Z
C064	Electrolytic	220 μF 10 V +80/−20%		BCEL112210Z
C065	Semi-conductor (SR)	0.01 μF 25 V ±10%		BCGC511035Z
C066	Electrolytic	47 μF 10 V +80/−20%		BCEL114700Z
C067	Semi-conductor (SR)	0.01 μF 25 V ±10%		BCGC511035Z
C068	Ceramic	39 pF 50 V ±10% SL		BCCG813905Z
C069	Ceramic	150 pF 50 V ±10% SL		BCCG811515Z
C070	— Not Used —			
C071	Semi-conductor (SR)	0.056 μF 25 V ±10%		BCGC515635Z
C072	Ceramic	0.001 μF 50 V ±20% YD(D)		BCKD811026Z
C073	Semi-conductor (SR)	0.0047 μF 25 V ±10%		BCGC514725Z
C074	Ceramic	560 pF 50 V ±10% SL		BCCG815615Z
C075	Ceramic	560 pF 50 V ±10% SL		BCCG815615Z
C076	Electrolytic	4.7 μF 50 V +80/−20%		BCEL814790Z
C077	Electrolytic	220 μF 10 V +80/−20%		BCEL112210Z
C078	Ceramic	0.001 μF 50 V ±20% YD(D)		BCKD811026Z
C079	— Not Used —			
C080	Electrolytic	0.22 μF 50 V +80/−20%		BCEL812280Z
C081	Electrolytic	1 μF 50 V +80/−20%		BCEL811090Z
C082	Electrolytic	2.2 μF 50 V +80/−20%		BCEL812290Z
C083	Ceramic	0.001 μF 50 V ±20% YD(D)		BCKD811026Z
C084	Electrolytic	100 μF 10 V +80/−20%		BCEL111010Z

REF. NO.	DESCRIPTION		RS PART NO.	MFR'S PART NO.
C085	Ceramic	100 pF 50 V ±5% CH		BCCC811014Z
C086	Semi-conductor (SR)	0.1 μF 25 V ±10%		BCGC511045Z
C087	Electrolytic	10 μF 16 V +80/−20%		BCEL311000Z
C088	Ceramic	0.001 μF 50 V ±20% YD(D)		BCKD811026Z
C089	Ceramic	0.047 μF 25 V +80/−20% ZF		BCKC514730Z
C090	— Not Used —			
C091	— Not Used —			
C092	— Not Used —			
C093	— Not Used —			
C094	— Not Used —			
C095	Semi-conductor (SR)	0.01 μF 25 V ±10%		BCGC511035Z
C096	Electrolytic	10 μF 16 V +80/−20%		BCEL311000Z
C097	Electrolytic	10 μF 16 V +80/−20%		BCEL311000Z
C098	— Not Used —			
C099	Electrolytic	100 μF 10 V +80/−20%		BCEL111010Z
C100	— Not Used —			
C101	Semi-conductor (SR)	0.1 μF 25 V ±10%		BCGC511045Z
C102	Electrolytic	470 μF 10 V +80/−20%		BCEL114710Z
C103	Electrolytic	47 μF 16 V +80/−20%		BCEL314700Z
C104	Electrolytic	2.2 μF 50 V +80/−20%		BCEL812290Z
C105	Electrolytic	4.7 μF 50 V +80/−20%		BCEL814790Z
C106	— Not Used —			
C107	Semi-conductor (SR)	0.1 μF 25 V ±10%		BCGC511045Z
C108	Ceramic	0.001 μF 50 V ±20% YD(D)		BCKD811026Z
C109	Ceramic	0.0047 μF 50 V +80/−20% YF(F)		BCKG814720Z
C110	— Not Used —			
C111	Semi-conductor (SR)	0.01 μF 25 V ±10%		BCGC511035Z
C112	Electrolytic	4.7 μF 50 V +80/−20%		BCEL814790Z
C113	Ceramic	1 pF 50 V ±0.25% CK		BCCF811091Z
C114	Ceramic	4 pF 50 V ±0.25% UJ		BCCU814091Z
C115	Electrolytic	1 μF 50 V +80/−20%		BCEL811090Z
C116	Ceramic	4 pF 50 V ±0.25% UJ		BCCU814091Z
C117	Ceramic	82 pF 50 V ±5% RH		BCCR818204Z
C118	Ceramic	150 pF 50 V ±5% RH		BCCR811514Z
C119	Ceramic	0.5 pF 50 V ±0.25% CK		BCCF815081Z
C120	Ceramic	22 pF 50 V ±5% RH		BCCR812204Z
C121	Ceramic	33 pF 50 V ±5% RH		BCCR813304Z
C122	Ceramic	120 pF 50 V ±5% RH		BCCR811214Z
C123	Ceramic	150 pF 50 V ±5% RH		BCCR811514Z
C124	Ceramic	390 pF 50 V ±10% SL		BCCG813915Z
C125	Ceramic	0.047 μF 25 V +80/−20% ZF		BCKC514730Z
C126	Ceramic	0.001 μF 50 V ±20% YD(D)		BCKD811026Z
C127	Electrolytic	0.47 μF 50 V +80/−20%		BCEL814780Z
C128	Ceramic	560 pF 50 V ±10% SL		BCCG815615Z
C129	Ceramic	560 pF 50 V ±10% SL		BCCG815615Z
C130	Ceramic	0.01 μF 50 V ±20% YD(D)		BCKD811036Z
C131	Ceramic	820 pF 50 V ±10% SL		BCCG818215Z
C132	Ceramic	0.01 μF 50 V +80/−20% YF(F)		BCKG811030Z
C133	Electrolytic	2.2 μF 50 V +80/−20%		BCEL812290Z
C134	Ceramic	0.001 μF 50 V +80/−20% YF(F)		BCKG811020Z
C135	Ceramic	0.001 μF 50 V ±20% YD(D)		BCKD811026Z

REF. NO.	DESCRIPTION		RS PART NO.	MFR'S PART NO.
C136	Ceramic	10 pF 50 V ±0.5% CH		BCCC811002Z
C137	Ceramic	0.01 μF 50 V +80/−20% YF(F)		BCKG811030Z
C138	Ceramic	0.01 μF 50 V ±20% YD(D)		BCKD811036Z
C139	Ceramic	560 pF 50 V ±10% SL		BCCG815615Z
C140	Ceramic	390 pF 50 V ±10% YB(B)		BCKB813915Z
C141	Semi-conductor (SR)	0.0047 μF 25 V ±10%		BCGC514725Z
C142	Ceramic	0.01 μF 50 V +80/−20% YF(F)		BCKG811030Z
C143	Ceramic	470 pF 50 V ±10% SL		BCCG814715Z
C144	— Not Used —			
C145	Ceramic	0.01 μF 50 V +80/−20% YF(F)		BCKG811030Z
C146	Ceramic	100 pF 50 V ±10% SL		BCCG811015Z
C147	Ceramic	0.0047 μF 50 V +80/−20% YF(F)		BCKG814720Z
C148	Semi-conductor (SR)	0.01 μF 25 V ±10%		BCGC511035Z
C149	— Not Used —			
C150	— Not Used —			
C151	Ceramic	0.01 μF 50 V +80/−20% YF(F)		BCKG811030Z
C152	Ceramic	0.001 μF 50 V ±20% YD(D)		BCKD811026Z
C153	Ceramic	0.01 μF 50 V +80/−20% YF(F)		BCKG811030Z
C154	Electrolytic	22 μF 10 V +80/−20%		BCEL112200Z
C155	Electrolytic	4.7 μF 50 V +80/−20%		BCEL814790Z
C156	Semi-conductor (SR)	0.01 μF 25 V ±10%		BCGC511035Z
C157	Semi-conductor (SR)	0.01 μF 25 V ±10%		BCGC511035Z
C158	Semi-conductor (SR)	0.01 μF 25 V ±10%		BCGC511035Z
C159	Semi-conductor (SR)	0.047 μF 25 V ±10%		BCGC514735Z
C160	Semi-conductor (SR)	0.022 μF 25 V ±10%		BCGC512235Z
C161	Semi-conductor (SR)	0.047 μF 25 V ±10%		BCGC514735Z
C162	Electrolytic	1000 μF 25 V ±20% C-095		BCER511026Z
C163	Electrolytic	1000 μF 25 V ±20% C-095		BCER511026Z
C164	— Not Used —			
C165	Ceramic	0.01 μF 50 V +80/−20% YF(F)		BCKG811030Z
C166	Ceramic	0.01 μF 50 V +80/−20% YF(F)		BCKG811030Z
C167	Ceramic	0.01 μF 50 V +80/−20% YF(F)		BCKG811030Z
DIODES				
D001	Silicon	1N60 AM		BDAY0001001
D002	Silicon	1N60 AM		BDAY0001001
D003	Silicon	1SS133 Taping		BDAY0497001
D004	Zener	HZ3B3		BDAY0269003
D005	Silicon	1SS133 Taping		BDAY0497001
D006	— Not Used —			
D007	Silicon	1N60 AM		BDAY0001001
D008	Silicon	1N60 AM		BDAY0001001
D009	Silicon	1SS133 Taping		BDAY0497001
D010	Silicon	MC-301		BDAY0090001
D011	Silicon	MC-301		BDAY0090001
D012	Silicon	1SS133 Taping		BDAY0497001
D013	Silicon	1SS133 Taping		BDAY0497001
D014	Silicon	1SS133 Taping		BDAY0497001
D015	Silicon	1SS133 Taping		BDAY0497001
D016	Silicon	1SS133 Taping		BDAY0497001

REF. NO.	DESCRIPTION		RS PART NO.	MFR'S PART NO.
D017	Silicon	1SS133 Taping		BDAY0497001
D018	Silicon	1SS133 Taping		BDAY0497001
D019	Silicon	1SS133 Taping		BDAY0497001
D020	Silicon	1SS133 Taping		BDAY0497001
D021	Silicon	1SS133 Taping		BDAY0497001
D022	Silicon	1SS133 Taping		BDAY0497001
D023	Silicon	1SS133 Taping		BDAY0497001
D024	Zener	HZ5C-1		BDAY0269002
D025	Silicon	1SS133 Taping		BDAY0497001
D026	— Not Used —			
D027	Silicon	1SS133 Taping		BDAY0497001
D028	Silicon	1SS133 Taping		BDAY0497001
D029	Silicon	1SS133 Taping		BDAY0497001
D030	— Not Used —			
D031	Silicon	1SS133 Taping		BDAY0497001
D032	Silicon	1SS133 Taping		BDAY0497001
D033	Varistor	KB-262		BDFY0004002
D034	Silicon	1SS133 Taping		BDAY0497001
D035	Silicon	1SS133 Taping		BDAY0497001
D036	Varistor	MV-1YH-S		BDFY0058001
D037	Varistor	MV-1YH-S		BDFY0058001
D038	Silicon	1SS133 Taping		BDAY0497001
D039	Silicon	1SS133 Taping		BDAY0497001
D040	— Not Used —			
D041	Silicon	1N4003		BDAY0133001
D042	Silicon	1SS133 Taping		BDAY0497001
D043	Silicon	1SS133 Taping		BDAY0497001
D044	Silicon	1N5401		BDAY0245001
D045	Silicon	1SS133 Taping		BDAY0497001
D046	Silicon	1SS133 Taping		BDAY0497001
COILS				
L001		LB-693 41M7-M(R12H810A)		BLBY0693001
L002		LB-695 L-2M7-S(R12-H882X)		BLBY0695001
L003		LB-691 41M7-2(R12 H811A)		BLBY0691001
L004		LB-691 41M7-2(R12 H811A)		BLBY0691001
L005		LB-691 41M7-2(R12 H811A)		BLBY0691001
L006	Inductor Molded	LZ-051 SP0305-471K 470 μH		BLZY0051471
L007		LB-694 41M7-S(R12-H881A)		BLBY0694001
L008		LB-692 41M7-S(R12-H880A)		BLBY0692001
L009	Inductor Molded	LZ-035 470 μH		BLZY0035471
L010	— Not Used —			
L011	Inductor Molded	LZ-035 470 μH		BLZY0035471
L012		LB-689 L-3M7-D3(R12H600X)		BLBY0689001
L013		LB-689 L-3M7-D3(R12H600X)		BLBY0689001
L014		LE-096 8 1/2T		BLEY0096001
L015		LE-092 6 1/2T		BLEY0092001
L016		LE-093 7 1/2T		BLEY0093001
L017		LD-230		BLDY0230001
L018		LD-230		BLDY0230001

REF. NO.	DESCRIPTION		RS PART NO.	MFR'S PART NO.
L019		LD-221		BLDY0221001
L020		LD-229		BLDY0229001
L021		LD-087 BF04-3*5*1		BLDY0087001
L022		LD-087 BF04-3*5*1		BLDY0087001
L023		LD-087 BF04-3*5*1		BLDY0087001
L024		LD-228 AT0502T-3012		BLDY0228001
L025		LE-201 D2.4 3 1/2T		BLEY0201001
L026		LB-692 41M7-S(R12-H880A)		BLBY0692001
TRANSISTORS				
Q001	Silicon, NPN	DB-259 2SC1675-L		BDBC1675111
Q002	Silicon, NPN	DB-259 2SC1675-L		BDBC1675111
Q003	Silicon, NPN	DB-259 2SC1675-L		BDBC1675111
Q004	Silicon, NPN	DB-224 2SC945A-Q		BDBC0945507
Q005	Silicon, NPN	DB-224 2SC945A-Q		BDBC0945507
Q006	Silicon, PNP	DB-027 2SA733A-PB		BDBA0733541
Q007	Silicon, NPN	DB-224 2SC945A-Q		BDBC0945507
Q008	Silicon, NPN	DB-224 2SC945A-Q		BDBC0945507
Q009	— Not Used —			
Q010	— Not Used —			
Q011	Silicon, NPN	DB-224 2SC945A-Q		BDBC0945507
Q012	Silicon, NPN	DB-224 2SC945A-Q		BDBC0945507
Q013	Silicon, NPN	DB-295 2SC1674-L		BDBC1674111
Q014	Field Effect Transistor	DC-019 2SK192A-BL		BDCB0192533
Q015	Silicon, NPN	DB-295 2SC1674-L		BDBC1674111
Q016	Silicon, NPN	DB-259 2SC1675-L		BDBC1675111
Q017	Silicon, NPN	DB-259 2SC1675-L		BDBC1675111
Q018	Silicon, NPN	DB-269 2SC1730-L		BDBC1730111
Q019	Silicon, PNP	DB-027 2SA733A-PB		BDBA0733541
Q020	— Not Used —			
Q021	Silicon, NPN	DB-224 2SC945A-Q		BDBC0945507
Q022	Silicon, NPN	DB-224 2SC945A-Q		BDBC0945507
Q023	Silicon, NPN	DB-259 2SC1675-L		BDBC1675111
Q024	Silicon, NPN	DB-383 2SC3242A-E		BDBC3242536
Q025	Silicon, PNP	DB-027 2SA733A-PB		BDBA0733541
Q026	Silicon, NPN	DB-259 2SC1675-L		BDBC1675111
Q027	Silicon, NPN	DB-383 2SC3242A-E		BDBC3242536
Q028	Silicon, NPN	DB-224 2SC945A-Q		BDBC0945507
Q029	Silicon, PNP	DB-106 2SB525-E		BDBB0525105
Q030	Silicon, NPN	DB-224 2SC945A-Q		BDBC0945507
Q031	Silicon, NPN	DB-224 2SC945A-Q		BDBC0945507
Q032	Silicon, NPN	DB-224 2SC945A-Q		BDBC0945507
Q033	Silicon, NPN	DB-272 2SC1973-SSB		BDBC1973315
Q034	Silicon, NPN	DB-228 2SC2086-D		BDBC2086104
Q035	Silicon, NPN	DB-224 2SC945A-Q		BDBC0945507
Q036	Silicon, NPN	DB-224 2SC945A-Q		BDBC0945507
Q037	Silicon, NPN	DB-224 2SC945A-Q		BDBC0945507
Q038	Silicon, NPN	DB-224 2SC945A-Q		BDBC0945507
Q039	Silicon, NPN	DB-224 2SC945A-Q		BDBC0945507

REF. NO.	DESCRIPTION		RS PART NO.	MFR'S PART NO.
RESISTORS				
R001	Carbon Axial Lead	10 k ohm 1/6 W ±5% Taping		BRFT611034Z
R002	Carbon Axial Lead	33 k ohm 1/6 W ±5% Taping		BRFT613334Z
R003	Carbon Axial Lead	680 ohm 1/6 W ±5% Taping		BRFT616814Z
R004	Carbon Axial Lead	330 ohm 1/6 W ±5% Taping		BRFT613314Z
R005	Carbon Axial Lead	100 ohm 1/6 W ±5% Taping		BRFT611014Z
R006	Carbon Axial Lead	56 k ohm 1/6 W ±5% Taping		BRFT615634Z
R007	Carbon Axial Lead	100 ohm 1/6 W ±5% Taping		BRFT611014Z
R008	Carbon Axial Lead	1.5 k ohm 1/6 W ±5% Taping		BRFT611524Z
R009	Carbon Axial Lead	330 ohm 1/6 W ±5% Taping		BRFT613314Z
R010	— Not Used —			
R011	Carbon Axial Lead	68 ohm 1/6 W ±5% Taping		BRFT616804Z
R012	Carbon Axial Lead	100 k ohm 1/8 W ±5% Taping		BRFT181044Z
R013	Carbon Axial Lead	56 ohm 1/6 W ±5% Taping		BRFT615604Z
R014	Carbon Axial Lead	10 k ohm 1/6 W ±5% Taping		BRFT611034Z
R015	Carbon Axial Lead	10 k ohm 1/6 W ±5% Taping		BRFT611034Z
R016	Carbon Axial Lead	470 k ohm 1/6 W ±5% Taping		BRFT614744Z
R017	Carbon Axial Lead	10 k ohm 1/6 W ±5% Taping		BRFT611034Z
R018	Carbon Axial Lead	10 k ohm 1/6 W ±5% Taping		BRFT611034Z
R019	Carbon Axial Lead	330 ohm 1/6 W ±5% Taping		BRFT613314Z
R020	— Not Used —			
R021	Carbon Axial Lead	3.3 k ohm 1/6 W ±5% Taping		BRFT613324Z
R022	Carbon Axial Lead	1.2 M ohm 1/6 W ±5% Taping		BRFT611254Z
R023	Carbon Axial Lead	1 M ohm 1/6 W ±5% Taping		BRFT611054Z
R024	Carbon Axial Lead	100 k ohm 1/6 W ±5% Taping		BRFT611044Z
R025	Carbon Axial Lead	47 k ohm 1/6 W ±5% Taping		BRFT614734Z
R026	Carbon Axial Lead	1 k ohm 1/6 W ±5% Taping		BRFT611024Z
R027	Carbon Axial Lead	150 k ohm 1/6 W ±5% Taping		BRFT611544Z
R028	Carbon Axial Lead	100 k ohm 1/6 W ±5% Taping		BRFT611044Z
R029	— Not Used —			
R030	Carbon Axial Lead	1.8 k ohm 1/6 W ±5% Taping		BRFT611824Z
R031	Carbon Axial Lead	100 k ohm 1/6 W ±5% Taping		BRFT611044Z
R032	Carbon Axial Lead	100 k ohm 1/6 W ±5% Taping		BRFT611044Z
R033	Carbon Axial Lead	100 k ohm 1/6 W ±5% Taping		BRFT611044Z
R034	Carbon Axial Lead	15 k ohm 1/6 W ±5% Taping		BRFT611534Z
R035	Carbon Axial Lead	39 k ohm 1/6 W ±5% Taping		BRFT613934Z
R036	Carbon Axial Lead	220 ohm 1/6 W ±5% Taping		BRFT612214Z
R037	Carbon Axial Lead	10 k ohm 1/6 W ±5% Taping		BRFT611034Z
R038	Carbon Axial Lead	3.3 k ohm 1/6 W ±5% Taping		BRFT613324Z
R039	Carbon Axial Lead	1 k ohm 1/6 W ±5% Taping		BRFT611024Z
R040	Carbon Axial Lead	220 ohm 1/6 W ±5% Taping		BRFT612214Z
R041	Carbon Axial Lead	10 k ohm 1/6 W ±5% Taping		BRFT611034Z
R042	Carbon Axial Lead	470 ohm 1/6 W ±5% Taping		BRFT614714Z
R043	Carbon Axial Lead	22 k ohm 1/6 W ±5% Taping		BRFT612234Z
R044	Carbon Axial Lead	220 ohm 1/6 W ±5% Taping		BRFT612214Z
R045	Carbon Axial Lead	1 k ohm 1/6 W ±5% Taping		BRFT611024Z
R046	Carbon Axial Lead	56 k ohm 1/6 W ±5% Taping		BRFT615634Z
R047	Carbon Axial Lead	1 k ohm 1/6 W ±5% Taping		BRFT611024Z
R048	Carbon Axial Lead	1.5 k ohm 1/6 W ±5% Taping		BRFT611524Z
R049	Carbon Axial Lead	470 ohm 1/6 W ±5% Taping		BRFT614714Z

REF. NO.	DESCRIPTION		RS PART NO.	MFR'S PART NO.
R050	Carbon Axial Lead	2.2 k ohm 1/6 W ±5% Taping		BRFT612224Z
R051	Carbon Axial Lead	10 k ohm 1/6 W ±5% Taping		BRFT611034Z
R052	Carbon Axial Lead	100 ohm 1/6 W ±5% Taping		BRFT611014Z
R053	Carbon Axial Lead	15 k ohm 1/6 W ±5% Taping		BRFT611534Z
R054	Carbon Axial Lead	4.7 k ohm 1/8 W ±5% Taping		BRFT184724Z
R055	Carbon Axial Lead	100 ohm 1/6 W ±5% Taping		BRFT611014Z
R056	Carbon Formed Vert	3.3 k ohm 1/6 W ±5%		BRUB613324Z
R057	— Not Used —			
R058	Carbon Axial Lead	8.2 k ohm 1/6 W ±5% Taping		BRFT618224Z
R059	Carbon Axial Lead	6.8 k ohm 1/6 W ±5% Taping		BRFT616824Z
R060	— Not Used —			
R061	Carbon Axial Lead	10 k ohm 1/6 W ±5% Taping		BRFT611034Z
R062	Carbon Formed Vert	1 k ohm 1/6 W ±5%		BRUB611024Z
R063	Carbon Axial Lead	1 k ohm 1/6 W ±5% Taping		BRFT611024Z
R064	Carbon Axial Lead	820 ohm 1/6 W ±5% Taping		BRFT618214Z
R065	Carbon Axial Lead	22 k ohm 1/6 W ±5% Taping		BRFT612234Z
R066	Carbon Axial Lead	5.6 k ohm 1/6 W ±5% Taping		BRFT615624Z
R067	Carbon Axial Lead	680 ohm 1/6 W ±5% Taping		BRFT616814Z
R068	Carbon Axial Lead	100 ohm 1/6 W ±5% Taping		BRFT611014Z
R069	Carbon Axial Lead	47 k ohm 1/6 W ±5% Taping		BRFT614734Z
R070	Carbon Axial Lead	220 ohm 1/6 W ±5% Taping		BRFT612214Z
R071	Carbon Axial Lead	1.5 k ohm 1/6 W ±5% Taping		BRFT611524Z
R072	Carbon Axial Lead	100 ohm 1/6 W ±5% Taping		BRFT611014Z
R073	Carbon Axial Lead	270 ohm 1/6 W ±5% Taping		BRFT612714Z
R074	Carbon Formed Vert	82 ohm 1/6 W ±5%		BRUB618204Z
R075	Carbon Axial Lead	39 ohm 1/6 W ±5% Taping		BRFT613904Z
R076	Carbon Axial Lead	1 k ohm 1/6 W ±5% Taping		BRFT611024Z
R077	Carbon Axial Lead	10 k ohm 1/6 W ±5% Taping		BRFT611034Z
R078	Carbon Axial Lead	68 k ohm 1/6 W ±5% Taping		BRFT616834Z
R079	Carbon Axial Lead	12 k ohm 1/6 W ±5% Taping		BRFT611234Z
R080	Carbon Formed Vert	100 k ohm 1/6 W ±5%		BRUB611044Z
R081	Carbon Axial Lead	1 k ohm 1/6 W ±5% Taping		BRFT611024Z
R082	Carbon Axial Lead	10 k ohm 1/6 W ±5% Taping		BRFT611034Z
R083	Carbon Axial Lead	100 ohm 1/6 W ±5% Taping		BRFT611014Z
R084	Carbon Axial Lead	2.2 k ohm 1/6 W ±5% Taping		BRFT612224Z
R085	Carbon Axial Lead	2.2 k ohm 1/6 W ±5% Taping		BRFT612224Z
R086	Carbon Formed Vert	180 k ohm 1/6 W ±5%		BRUB611844Z
R087	Carbon Axial Lead	1 k ohm 1/8 W ±5% Taping		BRFT181024Z
R088	Carbon Axial Lead	220 ohm 1/6 W ±5% Taping		BRFT612214Z
R089	Carbon Axial Lead	680 ohm 1/6 W ±5% Taping		BRFT616814Z
R090	— Not Used —			
R091	Carbon Axial Lead	120 k ohm 1/6 W ±5% Taping		BRFT611244Z
R092	Carbon Axial Lead	100 ohm 1/6 W ±5% Taping		BRFT611014Z
R093	Carbon Axial Lead	15 k ohm 1/6 W ±5% Taping		BRFT611534Z
R094	Carbon Axial Lead	270 k ohm 1/6 W ±5% Taping		BRFT612744Z
R095	Carbon Axial Lead	4.7 k ohm 1/6 W ±5% Taping		BRFT614724Z
R096	Carbon Axial Lead	470 k ohm 1/6 W ±5% Taping		BRFT614744Z
R097	Carbon Axial Lead	100 ohm 1/6 W ±5% Taping		BRFT611014Z
R098	Carbon Axial Lead	100 ohm 1/6 W ±5% Taping		BRFT611014Z
R099	Carbon Axial Lead	27 k ohm 1/6 W ±5% Taping		BRFT612734Z
R100	— Not Used —			

REF. NO.	DESCRIPTION		RS PART NO.	MFR'S PART NO.
R101	Carbon Axial Lead	10 k ohm 1/6 W ±5% Taping		BRFT611034Z
R102	Carbon Axial Lead	47 k ohm 1/6 W ±5% Taping		BRFT614734Z
R103	Carbon Axial Lead	47 k ohm 1/6 W ±5% Taping		BRFT614734Z
R104	Carbon Axial Lead	10 k ohm 1/6 W ±5% Taping		BRFT611034Z
R105	Carbon Axial Lead	12 k ohm 1/6 W ±5% Taping		BRFT611234Z
R106	Carbon Axial Lead	5.6 k ohm 1/6 W ±5% Taping		BRFT615624Z
R107	Carbon Axial Lead	1.5 k ohm 1/6 W ±5% Taping		BRFT611524Z
R108	Carbon Axial Lead	4.7 k ohm 1/6 W ±5% Taping		BRFT614724Z
R109	Carbon Formed Vert	68 ohm 1/6 W ±5%		BRUB616804Z
R110	Carbon Axial Lead	1 k ohm 1/6 W ±5% Taping		BRFT611024Z
R111	Carbon Axial Lead	100 ohm 1/6 W ±5% Taping		BRFT611014Z
R112	Carbon Axial Lead	22 k ohm 1/6 W ±5% Taping		BRFT612234Z
R113	Carbon Axial Lead	1 k ohm 1/6 W ±5% Taping		BRFT611024Z
R114	Carbon Axial Lead	4.7 k ohm 1/6 W ±5% Taping		BRFT614724Z
R115	Carbon Axial Lead	1 k ohm 1/6 W ±5% Taping		BRFT611024Z
R116	Carbon Axial Lead	1 k ohm 1/6 W ±5% Taping		BRFT611024Z
R117	Carbon Axial Lead	470 ohm 1/6 W ±5% Taping		BRFT614714Z
R118	Carbon Formed Vert	3.3 k ohm 1/6 W ±5%		BRUB613324Z
R119	Carbon Axial Lead	22 k ohm 1/6 W ±5% Taping		BRFT612234Z
R120	Carbon Axial Lead	680 ohm 1/6 W ±5% Taping		BRFT616814Z
R121	— Not Used —			
R122	—Not Used —			
R123	— Not Used —			
R124	Carbon Formed Vert	3.3 k ohm 1/6 W ±5%		BRUB613324Z
R125	Carbon Formed Vert	10 k ohm 1/6 W ±5%		BRUB611034Z
R126	Carbon Axial Lead	1 k ohm 1/6 W ±5% Taping		BRFT611024Z
R127	Carbon Axial Lead	1.5 k ohm 1/6 W ±5% Taping		BRFT611524Z
R128	Carbon Axial Lead	47 k ohm 1/6 W ±5% Taping		BRFT614734Z
R129	Carbon Axial Lead	1 ohm 1/6 W ±5% Taping		BRFT611094Z
R130	— Not Used —			
R131	Carbon Axial Lead	100 kohm 1/6 W ±5% Taping		BRFT611044Z
R132	Carbon Formed Vert	150 ohm 1/6 W ±5%		BRUB611514Z
R133	— Not Used —			
R134	Carbon Formed Vert	390 k ohm 1/6 W ±5%		BRUB613944Z
R135	Carbon Axial Lead	27 k ohm 1/6 W ±5% Taping		BRFT612734Z
R136	Carbon Axial Lead	56 k ohm 1/6 W ±5% Taping		BRFT615634Z
R137	Carbon Axial Lead	2.2 M ohm 1/6 W ±5% Taping		BRFT612254Z
R138	Carbon Axial Lead	10 k ohm 1/6 W ±5% Taping		BRFT611034Z
R139	Carbon Axial Lead	2.2 M ohm 1/6 W ±5% Taping		BRFT612254Z
R140	Carbon Axial Lead	150 k ohm 1/6 W ±5% Taping		BRFT611544Z
R141	Carbon Axial Lead	4.7 k ohm 1/6 W ±5% Taping		BRFT614724Z
R142	Carbon Formed Vert	33 k ohm 1/6 W ±5%		BRUB613334Z
R143	Carbon Axial Lead	2.2 k ohm 1/6 W ±5% Taping		BRFT612224Z
R144	Carbon Formed Vert	10 k ohm 1/6 W ±5%		BRUB611034Z
R145	Carbon Axial Lead	820 ohm 1/6 W ±5% Taping		BRFT618214Z
R146	Carbon Axial Lead	4.7 k ohm 1/6 W ±5% Taping		BRFT614724Z
R147	Carbon Axial Lead	4.7 k ohm 1/6 W ±5% Taping		BRFT614724Z
R148	Carbon Formed Vert	680 k ohm 1/6 W ±5%		BRUB616844Z
R149	Carbon Axial Lead	82 ohm 1/2 W ±5% Taping		BRPB128204Z
R150	Carbon Formed Vert	10 k ohm 1/6 W ±5%		BRUB611034Z
R151	Carbon Axial Lead	10 k ohm 1/6 W ±5% Taping		BRFT611034Z

REF. NO.	DESCRIPTION		RS PART NO.	MFR'S PART NO.
R152	Carbon Axial Lead	39 k ohm 1/6 W ±5% Taping		BRFT613934Z
R153	Carbon Axial Lead	39 k ohm 1/6 W ±5% Taping		BRFT613934Z
R154	Carbon Axial Lead	33 ohm 1/6 W ±5% Taping		BRFT613304Z
R155	Carbon Axial Lead	10 k ohm 1/8 W ±5% Taping		BRFT181034Z
R156	Carbon Axial Lead	1 k ohm 1/6 W ±5% Taping		BRFT611024Z
R157	Carbon Axial Lead	4.7 k ohm 1/6 W ±5% Taping		BRFT614724Z
R158	Carbon Formed Vert	22 ohm 1/6 W ±5%		BRUB612204Z
R159	Carbon Formed Vert	3.9 k ohm 1/6 W ±5%		BRUB613924Z
R160	Carbon Axial Lead	10 ohm 1/6 W ±5% Taping		BRFT611004Z
R161	Carbon Axial Lead	330 ohm 1/6 W ±5% Taping		BRFT613314Z
R162	Carbon Axial Lead	47 ohm 1/6 W ±5% Taping		BRFT614704Z
R163	Carbon Axial Lead	100 ohm 1/6 W ±5% Taping		BRFT611014Z
R164	Carbon Axial Lead	10 ohm 1/6 W ±5% Taping		BRFT611004Z
R165	Carbon Axial Lead	1.5 k ohm 1/6 W ±5% Taping		BRFT611524Z
R166	Carbon Axial Lead	330 ohm 1/6 W ±5% Taping		BRFT613314Z
R167	Carbon Axial Lead	150 ohm 1/6 W ±5% Taping		BRFT611514Z
R168	Carbon Axial Lead	100 ohm 1/6 W ±5% Taping		BRFT611014Z
R169	Carbon Axial Lead	1.5 k ohm 1/6 W ±5% Taping		BRFT611524Z
R170	Carbon Axial Lead	680 ohm 1/6 W ±5% Taping		BRFT616814Z
R171	Carbon Axial Lead	1 k ohm 1/6 W ±5% Taping		BRFT611024Z
R172	Carbon Axial Lead	2.2 k ohm 1/6 W ±5% Taping		BRFT612224Z
R173	Carbon Axial Lead	220 ohm 1/6 W ±5% Taping		BRFT612214Z
R174	Carbon Axial Lead	1.5 k ohm 1/6 W ±5% Taping		BRFT611524Z
R175	Carbon Axial Lead	100 ohm 1/6 W ±5% Taping		BRFT611014Z
R176	Carbon Axial Lead	100 ohm 1/6 W ±5% Taping		BRFT611014Z
R177	Carbon Axial Lead	1.5 k ohm 1/6 W ±5% Taping		BRFT611524Z
R178	Carbon Axial Lead	560 ohm 1/6 W ±5% Taping		BRFT615614Z
R179	Carbon Axial Lead	56 k ohm 1/6 W ±5% Taping		BRFT615634Z
R180	— Not Used —			
R181	Carbon Axial Lead	3.3 k ohm 1/6 W ±5% Taping		BRFT613324Z
R182	Carbon Formed Vert	2.2 k ohm 1/6 W ±5%		BRUB612224Z
INTEGRATED CIRCUITS				
IC001		M5223L		BDEY0582001
IC002		AN612		BDEY0130001
IC003		NJM4558S		BDEY0218001
IC004	— Not Used —			
IC005		TDA1905		BDEY0603001
IC006		TA7320P		BDEY0364001
VARIABLE RESISTORS				
VR001	Semi-fixed	RT-182 TT24R 10KB		BRTY0182103
VR002	Semi-fixed	RT-182 TT24R 100KB		BRTY0182104
VR003	— Not Used —			
VR004	Semi-fixed	RT-182 TT24R 10KB		BRTY0182103
VR005	Semi-fixed	RT-182 TT24R 10KB		BRTY0182103
VR006	Semi-fixed	RT-182 TT24R 3KB		BRTY0182302
VR007	— Not Used —			
VR008	— Not Used —			

REF. NO.	DESCRIPTION		RS PART NO.	MFR'S PART NO.
VR009	Semi-fixed	RT-182 TT24R 200KB		BRTY0182204
VR010	— Not Used —			
VR011	Semi-fixed	RT-182 TT24R 100B		BRTY0182101
VR012	Semi-fixed	RT-182 TT24R 1KB		BRTY0182102
VR013	Semi-fixed	RT-182 TT24R 20KB		BRTY0182203
FILTERS				
FT001		FL-329		BFLY0329001
FT002		FL-285		BFLY0285001
FT003		FL-328		BFLY0328001
MISCELLANEOUS				
T001	Transformer Choke	TF-380		BTFY0380001
X001	Crystal	QX-122 10.6975		BQXY0122002
TP004	Terminal Check Point	TP-044		BTPY0044001
TP005	Terminal Check Point	TP-044		BTPY0044001
TP006	Terminal Check Point	TP-044		BTPY0044001
J003	Jack	JK-089 HSJ0615		BJKY0089001
J004	Jack	JK-089 HSJ0615		BJKY0089001

FRONT PCB ASS'Y

REF. NO.	DESCRIPTION		RS PART NO.	MFR'S PART NO.
	ASSEMBLY, PCB, FRONT Consists of the following:			AT553ZTBEB
PC BOARD				
B601	PC BOARD FRONT	PB-131AA		BPBY0131AAZ
CAPACITORS				
The following codes indicate variations of capacitors against temperatures; **YA** = ±5%, **YB** = ±10%, **YD** = +20 −30%, **YE** = +20 −50% (−25 ∼ +85°C), **ZF** = +30 −80% (−10 ∼ +70°C), **CH** = 0 ± 60ppm/°C, **RH** = 220ppm/°C ± 60ppm/°C, **TH** = −470ppm/°C ± 60ppm/°C, **SL** = +350ppm/°C ∼ −1000ppm/°C, **UJ** = −750ppm/°C ± 120ppm/°C				
C600	Ceramic	0.001 μF 50 V ±20% YD(D)		BCKD811026Z
C601	Electrolytic	10 μF 16 V ±20% C-107		BCEX311006Z
C602	Ceramic	0.001 μF 50 V ±20% YD(D)		BCKD811026Z
C603	Ceramic	0.01 μF 50 V +80/−20% YF(F)		BCKG811030Z
C604	Ceramic	0.001 μF 50 V ±20% YD(D)		BCKD811026Z
C605	Ceramic	0.001 μF 50 V ±20% YD(D)		BCKD811026Z
C606	Ceramic	0.001 μF 50 V ±20% YD(D)		BCKD811026Z
C607	— Not Used —			
C608	Ceramic	0.001 μF 50 V ±20% YD(D)		BCKD811026Z
C609	Ceramic	0.001 μF 50 V ±20% YD(D)		BCKD811026Z
C610	Semi-conductor (SR)	0.01 μF 25 V ±10%		BCGC511035Z

REF. NO.	DESCRIPTION		RS PART NO.	MFR'S PART NO.
DIODES				
D601	LED	GL8PR26		BDAY0501001
D602	LED	GL8PR26		BDAY0501001
D603	LED	GL8PR26		BDAY0501001
D604	— Not Used —			
D605	LED	GL8PR26		BDAY0501001
D606	LED	GL8PR26		BDAY0501001
D607	Silicon	1SS133 Taping		BDAY0497001
D608	Silicon	1SS133 Taping		BDAY0497001
D609	Silicon	1SS133 Taping		BDAY0497001
D610	Silicon	1SS133 Taping		BDAY0497001
D611	Silicon	1SS133 Taping		BDAY0497001
D612	Silicon	1SS133 Taping		BDAY0497001
D613	Silicon	1SS133 Taping		BDAY0497001
RESISTORS				
R600	Carbon Formed Vert	1 k ohm 1/6 W ±5%		BRUB611024Z
R601	Carbon Axial Lead	330 ohm 1/6 W ±5% Taping		BRFT613314Z
R602	Carbon Axial Lead	330 ohm 1/6 W ±5% Taping		BRFT613314Z
R603	Carbon Axial Lead	330 ohm 1/6 W ±5% Taping		BRFT613314Z
R604	Carbon Axial Lead	330 ohm 1/6 W ±5% Taping		BRFT613314Z
R605	Carbon Axial Lead	330 ohm 1/6 W ±5% Taping		BRFT613314Z
R606	Carbon Axial Lead	10 k ohm 1/6 W ±5% Taping		BRFT611034Z
R607	Carbon Axial Lead	5.6 k ohm 1/6 W ±5% Taping		BRFT615624Z
R608	Carbon Formed Vert	1 k ohm 1/6 W ±5%		BRUB611024Z
R609	Carbon Formed Vert	1 k ohm 1/6 W ±5%		BRUB611024Z
R610	Carbon Axial Lead	3.3 k ohm 1/6 W ±5% Taping		BRFT613324Z
R611	— Not Used —			
R612	Carbon Axial Lead	33 k ohm 1/6 W ±5% Taping		BRFT613334Z
R613	Carbon Axial Lead	10 k ohm 1/6 W ±5% Taping		BRFT611034Z
R614	Carbon Axial Lead	6.8 k ohm 1/6 W ±5% Taping		BRFT616824Z
R615	Carbon Axial Lead	150 ohm 1/6 W ±5% Taping		BRFT611514Z
R616	Carbon Axial Lead	3.3 k ohm 1/6 W ±5% Taping		BRFT613324Z
R617	Carbon Axial Lead	3.3 k ohm 1/6 W ±5% Taping		BRFT613324Z
R618	Carbon Axial Lead	1 k ohm 1/6 W ±5% Taping		BRFT611024Z
INTEGRATED CIRCUIT				
IC601		LB1423N		BDEY0430001
SWITCHES				
S601	Slide	SW-557 SSFYP22-14.5B		BSWY0557001
S602	Slide	SW-557 SSFYP22-14.5B		BSWY0557001
S603	Slide	SW-557 SSFYP22-14.5B		BSWY0557001
S604	— Not Used —			
S605	Push	SW-629		BSWY0629001
S606	Push	SW-629		BSWY0629001
S607	Push	SW-629		BSWY0629001

REF. NO.	DESCRIPTION		RS PART NO.	MFR'S PART NO.
S608	Push	SW-629		BSWY0629001
S609	— Not Used —			
S610	Push	SW-629		BSWY0629001
S611	Tact	SW-560 SKHJAB		BSWY0560001
S612	Tact	SW-560 SKHJAB		BSWY0560001
S613	Rotary	SR-409 EC-S-06		BSRY0409001

PLL PCB ASS'Y

REF. NO.	DESCRIPTION		RS PART NO.	MFR'S PART NO.
	ASSEMBLY, PCB, PLL Consists of the following:			AT553ZTBEC
PC BOARD				
B301	PC BOARD PLL	PB-133AA		BPBY0133AAZ
CAPACITORS				
The following codes indicate variations of capacitors against temperatures; **YA** = ±5%, **YB** = ±10%, **YD** = +20 −30%, **YE** = +20 −50% (−25 ∼ +85°C), **ZF** = +30 −80% (−10 ∼ +70°C), **CH** = 0 ± 60ppm/°C, **RH** = 220ppm/°C ± 60ppm/°C, **TH** = −470ppm/°C ± 60ppm/°C, **SL** = +350ppm/°C ∼ −1000ppm/°C, **UJ** = −750ppm/°C ± 120ppm/°C				
C301	Electrolytic	4.7 μF 50 V +80/−20%		BCEL814790Z
C302	Electrolytic	4.7 μF 50 V +80/−20%		BCEL814790Z
C303	Electrolytic	4.7 μF 50 V +80/−20%		BCEL814790Z
C304	Ceramic	39 pF 50 V ±10% SL		BCCG813905Z
C305	Ceramic	0.001 μF 50 V ±20% YD(D)		BCKD811026Z
C306	Ceramic	5 pF 50 V ±0.25% CH		BCCC815091Z
C307	Electrolytic	4.7 μF 25 V ±20% C-095		BCER514796Z
C308	Ceramic	10 pF 50 V ±0.5% CH		BCCC811002Z
C309	Ceramic	0.01 μF 50 V +80/−20% YF(F)		BCKG811030Z
C310	— Not Used —			
C311	Ceramic	5 pF 50 V ±0.25% CH		BCCC815091Z
C312	Ceramic	33 pF 50 V ±10% SL		BCCG813305Z
C313	Ceramic	0.001 μF 50 V ±20% YD(D)		BCKD811026Z
C314	Semi-conductor (SR)	0.047 μF 25 V ±10%		BCGC514735Z
C315	Electrolytic	1 μF 50 V +80/−20%		BCEL811090Z
C316	Electrolytic	1 μF 50 V +80/−20%		BCEL811090Z
C317	Semi-conductor (SR)	0.01 μF 25 V ±10%		BCGC511035Z
C318	Ceramic	0.001 μF 50 V ±20% YD(D)		BCKD811026Z
C319	Ceramic	0.022 μF 25 V +80/−20% YF(F)		BCKG512230Z
C320	— Not Used —			
C321	Ceramic	0.001 μF 50 V ±20% YD(D)		BCKD811026Z
C322	Ceramic	0.001 μF 50 V ±20% YD(D)		BCKD811026Z
C323	Ceramic	56 pF 50 V ±10% SL		BCCG815605Z

REF. NO.	DESCRIPTION		RS PART NO.	MFR'S PART NO.
C324	Ceramic	0.001 μF 50 V ±20% YD(D)		BCKD811026Z
C325	Ceramic	100 pF 50 V ±5% CH		BCCC811014Z
C326	Ceramic	0.001 μF 50 V ±20% YD(D)		BCKD811026Z
C327	Ceramic	100 pF 50 V ±5% CH		BCCC811014Z
C328	— Not Used —			
C329	Ceramic	0.001 μF 50 V ±20% YD(D)		BCKD811026Z
C330	— Not Used —			
C331	Ceramic	0.001 μF 50 V ±20% YD(D)		BCKD811026Z
C332	— Not Used —			
C333	— Not Used —			
C334	— Not Used —			
C335	— Not Used —			
C336	— Not Used —			
C337	— Not Used —			
C338	Ceramic	15 pF 50 V ±10% SL		BCCG811505Z
C339	Ceramic	8 pF 50 V ±0.5% SL		BCCG818092Z
C340	— Not Used —			
C341	Ceramic	15 pF 50 V ±10% SL		BCCG811505Z
C342	Ceramic	0.022 μF 25 V +80/−20% YF(F)		BCKG512230Z
C343	Ceramic	0.001 μF 50 V ±20% YD(D)		BCKD811026Z
C344	Ceramic	0.001 μF 50 V ±20% YD(D)		BCKD811026Z
C345	Ceramic	100 pF 50 V ±5% CH		BCCC811014Z
C346	Ceramic	0.001 μF 50 V ±20% YD(D)		BCKD811026Z
C347	Ceramic	100 pF 50 V ±5% CH		BCCC811014Z
C348	Ceramic	0.001 μF 50 V ±20% YD(D)		BCKD811026Z
C349	Ceramic	390 pF 50 V ±10% UJ		BCCU813915Z
C350	Ceramic	0.01 μF 50 V +80/−20% YF(F)		BCKG811030Z
C351	Ceramic	0.01 μF 50 V +80/−20% YF(F)		BCKG811030Z
C352	Ceramic	0.001 μF 50 V ±20% YD(D)		BCKD811026Z
C353	Ceramic	180 pF 50 V ±10% UJ		BCCU811815Z
C354	Ceramic	0.022 μF 25 V +80/−20% YF(F)		BCKG512230Z
C355	Electrolytic	0.47 μF 50 V +80/−20%		BCEL814780Z
C356	Ceramic	0.001 μF 50 V ±20% YD(D)		BCKD811026Z
C357	Ceramic	9 pF 50 V ±0.5% SL		BCCG819092Z
C358	Ceramic	22 pF 50 V ±10% SL		BCCG812205Z
C359	Ceramic	39 pF 50 V ±10% SL		BCCG813905Z
C360	— Not Used —			
C361	Ceramic	6 pF 50 V ±0.5% SL		BCCG816092Z
C362	Ceramic	18 pF 50 V ±10% SL		BCCG811805Z
C363	Ceramic	0.01 μF 50 V +80/−20% YF(F)		BCKG811030Z
C364	Semi-conductor (SR)	0.01 μF 25 V ±10%		BCGC511035Z
C365	Electrolytic	1 μF 50 V +80/−20%		BCEL811090Z
C366	Electrolytic	1 μF 50 V +80/−20%		BCEL811090Z
C367	Electrolytic	4.7 μF 50 V +80/−20%		BCEL814790Z
C368	Semi-conductor (SR)	0.039 μF 25 V ±10%		BCGC513935Z
C369	Semi-conductor (SR)	0.033 μF 25 V ±10%		BCGC513335Z
C370	Electrolytic	4.7 μF 25 V+80/−20%		BCEL514790Z
C371	Ceramic	100 pF 50 V ±5% CH		BCCC811014Z
C372	Ceramic	18 pF 50 V ±5% CH		BCCC811804Z
C373	Ceramic	220 pF 50 V ±5% UJ		BCCU812214Z
C374	Ceramic	68 pF 50 V ±5% CH		BCCC816804Z

REF. NO.	DESCRIPTION		RS PART NO.	MFR'S PART NO.
C375	Ceramic	0.001 μF 50 V ±20% YD(D)		BCKD811026Z
C376	Electrolytic	4.7 μF 50 V +80/−20%		BCEL814790Z
C377	Semi-conductor (SR)	0.047 μF 25 V ±10%		BCGC514735Z
C378	Ceramic	0.001 μF 50 V ±20% YD(D)		BCKD811026Z
C379	Semi-conductor (SR)	0.047 μF 25 V ±10%		BCGC514735Z
C380	— Not Used —			
C381	Ceramic	0.001 μF 50 V ±20% YD(D)		BCKD811026Z
C382	Ceramic	0.0047 μF 50 V +80/−20% YF(F)		BCKG814720Z
C383	Ceramic	12 pF 50 V ±5% RH		BCCR811204Z
C384	Ceramic	100 pF 50 V ±5% RH		BCCR811014Z
C385	Ceramic	470 pF 50 V ±5% UJ		BCCU814714Z
C386	Ceramic	150 pF 50 V ±5% UJ		BCCU811514Z
C387	— Not Used —			
C388	Ceramic	0.01 μF 50 V +80/−20% YF(F)		BCKG811030Z
C389	Ceramic	0.01 μF 50 V +80/−20% YF(F)		BCKG811030Z
DIODES				
D301	Silicon	1SV113		BDAY0278001
D302	Silicon	1SV113		BDAY0278001
D303	Silicon	1SV113		BDAY0278001
D304	Silicon	1SV113		BDAY0278001
D305	Silicon	1SV113		BDAY0278001
D306	Varicap			BDAY0281002
D307	Silicon	1SS133 Taping		BDAY0497001
COILS				
L301		LE-246D0.63 1/2T		BLEY0246001
L302		LB-684 L-2M7-T1(R12H807X)		BLBY0684001
L303		LB-683 L-3M7-T1(R12H808X)		BLBY0683001
L304		LB-683 L-3M7-T1(R12H808X)		BLBY0683001
L305	— Not Used —			
L306	— Not Used —			
L307	— Not Used —			
L308	— Not Used —			
L309	Inductor Molded	LZ-051 SP0305-2R7M 2.7 μH		BLZY0051279
L310	— Not Used —			
L311		LB-683 L-3M7-T1(R12H808X)		BLBY0683001
L312		LB-682 L-2M7-T1(R12H599X)		BLBY0682001
L313		LB-689 L-3M7-D3(R12H600X)		BLBY0689001
L314	Inductor Molded	LZ-051 SP0305-4R7K 4.7UH		BLZY0051479
L315	Inductor Molded	LZ-051 SP0305-100K 10UH		BLZY0051100
L316	Inductor Molded	LZ-044 262LY-682K 6.8MH		BLZY0044682
L317		LB-686 L-2M7-T1(R12H806X)		BLBY0686001
L318		LB-687 51M7-S(R12H879A)		BLBY0687001
L319		LB-688 51M7-T1(R12H809A)		BLBY0688001
L320	— Not Used —			
L321		LB-685 L-2M7-T1(R12H855)		BLBY0685001

REF. NO.	DESCRIPTION		RS PART NO.	MFR'S PART NO.
TRANSISTORS				
Q301	Silicon, NPN	DB-259 2SC1675-L		BDBC1675111
Q302	Silicon, NPN	DB-295 2SC1674-L		BDBC1674111
Q303	Silicon, NPN	DB-259 2SC1675-L		BDBC1675111
Q304	Silicon, NPN	DB-259 2SC1675-L		BDBC1675111
Q305	Silicon, NPN	DB-295 2SC1674-L		BDBC1674111
Q306	Silicon, NPN	DB-295 2SC1674-L		BDBC1674111
Q307	Silicon, NPN	DB-259 2SC1675-L		BDBC1675111
Q308	Silicon, NPN	DB-295 2SC1674-L		BDBC1674111
Q309	Silicon, NPN	DB-259 2SC1675-L		BDBC1675111
RESISTORS				
R300	Carbon Axial Lead	220 ohm 1/6 W ±5% Taping		BRFT612214Z
R301	Carbon Axial Lead	4.7 k ohm 1/6 W ±5% Taping		BRFT614724Z
R302	Carbon Axial Lead	5.6 k ohm 1/6 W ±5% Taping		BRFT615624Z
R303	Carbon Axial Lead	680 ohm 1/6 W ±5% Taping		BRFT616814Z
R304	Carbon Axial Lead	1.5 k ohm 1/6 W ±5% Taping		BRFT611524Z
R305	Carbon Axial Lead	3.3 k ohm 1/6 W ±5% Taping		BRFT613324Z
R306	Carbon Axial Lead	1.5 k ohm 1/6 W ±5% Taping		BRFT611524Z
R307	Carbon Axial Lead	3.3 k ohm 1/6 W ±5% Taping		BRFT613324Z
R308	Carbon Axial Lead	10 k ohm 1/8 W ±5% Taping		BRFT181034Z
R309	Carbon Axial Lead	1 k ohm 1/6 W ±5% Taping		BRFT611024Z
R310	— Not Used —			
R311	Carbon Axial Lead	22 k ohm 1/6 W ±5% Taping		BRFT612234Z
R312	Carbon Axial Lead	120 ohm 1/6 W ±5% Taping		BRFT611214Z
R313	Carbon Axial Lead	820 ohm 1/6 W ±5% Taping		BRFT618214Z
R314	Carbon Axial Lead	820 ohm 1/6 W ±5% Taping		BRFT618214Z
R315	Carbon Axial Lead	3.3 k ohm 1/6 W ±5% Taping		BRFT613324Z
R316	Carbon Axial Lead	330 ohm 1/6 W ±5% Taping		BRFT613314Z
R317	Carbon Axial Lead	330 ohm 1/8 W ±5% Taping		BRFT183314Z
R318	Carbon Axial Lead	180 ohm 1/6 W ±5% Taping		BRFT611814Z
R319	Carbon Axial Lead	180 ohm 1/6 W ±5% Taping		BRFT611814Z
C320	— Not Used —			
R321	Carbon Axial Lead	1 k ohm 1/6 W ±5% Taping		BRFT611024Z
R322	Carbon Axial Lead	180 ohm 1/6 W ±5% Taping		BRFT611814Z
R323	Carbon Axial Lead	10 k ohm 1/6 W ±5% Taping		BRFT611034Z
R324	Carbon Axial Lead	10 k ohm 1/6 W ±5% Taping		BRFT611034Z
R325	Carbon Axial Lead	1 k ohm 1/6 W ±5% Taping		BRFT611024Z
R326	Carbon Axial Lead	180 ohm 1/6 W ±5% Taping		BRFT611814Z
R327	Carbon Axial Lead	180 ohm 1/6 W ±5% Taping		BRFT611814Z
R328	Carbon Axial Lead	470 ohm 1/8 W ±5% Taping		BRFT184714Z
R329	Carbon Axial Lead	100 k ohm 1/6 W ±5% Taping		BRFT611044Z
R330	— Not Used —			
R331	Carbon Axial Lead	10 k ohm 1/6 W ±5% Taping		BRFT611034Z
R332	Carbon Axial Lead	4.7 k ohm 1/6 W ±5% Taping		BRFT614724Z
R333	Carbon Axial Lead	470 ohm 1/6 W ±5% Taping		BRFT614714Z
R334	Carbon Axial Lead	6.8 k ohm 1/6 W ±5% Taping		BRFT616824Z
R335	Carbon Axial Lead	680 ohm 1/6 W ±5% Taping		BRFT616814Z
R336	Carbon Axial Lead	10M ohm 1/8 W ±5% Taping		BRFT181064Z

REF. NO.	DESCRIPTION		RS PART NO.	MFR'S PART NO.
R337	Carbon Axial Lead	8.2 k ohm 1/6 W ±5% Taping		BRFT618224Z
R338	Carbon Axial Lead	8.2 k ohm 1/6 W ±5% Taping		BRFT618224Z
R339	Carbon Axial Lead	10 k ohm 1/6 W ±5% Taping		BRFT611034Z
R340	Carbon Axial Lead	1 k ohm 1/6 W ±5% Taping		BRFT611024Z
R341	Carbon Axial Lead	10 k ohm 1/6 W ±5% Taping		BRFT611034Z
R342	Carbon Axial Lead	4.7 k ohm 1/6 W ±5% Taping		BRFT614724Z
R343	Carbon Axial Lead	1 k ohm 1/8 W ±5% Taping		BRFT181024Z
R344	Carbon Axial Lead	10 k ohm 1/6 W ±5% Taping		BRFT611034Z
R345	Carbon Axial Lead	3.3 k ohm 1/6 W ±5% Taping		BRFT613324Z
R346	Carbon Axial Lead	10 k ohm 1/6 W ±5% Taping		BRFT611034Z
R347	Carbon Axial Lead	10 k ohm 1/6 W ±5% Taping		BRFT611034Z
R348	Carbon Axial Lead	15 k ohm 1/6 W ±5% Taping		BRFT611534Z
R349	Carbon Axial Lead	1 k ohm 1/6 W ±5% Taping		BRFT611024Z
R350	Carbon Axial Lead	470 ohm 1/6 W ±5% Taping		BRFT614714Z
R351	Carbon Axial Lead	1 k ohm 1/6 W ±5% Taping		BRFT611024Z
R352	Carbon Axial Lead	10 k ohm 1/6 W ±5% Taping		BRFT611034Z
R353	Carbon Axial Lead	10 k ohm 1/6 W ±5% Taping		BRFT611034Z
R354	Carbon Axial Lead	1 k ohm 1/6 W ±5% Taping		BRFT611024Z
R355	Carbon Axial Lead	180 ohm 1/6 W ±5% Taping		BRFT611814Z
R356	Carbon Axial Lead	100 ohm 1/6 W ±5% Taping		BRFT611014Z
R357	Carbon Axial Lead	470 ohm 1/6 W ±5% Taping		BRFT614714Z
R358	Carbon Axial Lead	10 k ohm 1/6 W ±5% Taping		BRFT611034Z
R359	Carbon Axial Lead	10 k ohm 1/6 W ±5% Taping		BRFT611034Z
R360	Carbon Axial Lead	10 k ohm 1/6 W ±5% Taping		BRFT611034Z
R361	Carbon Axial Lead	10 k ohm 1/6 W ±5% Taping		BRFT611034Z
R362	Carbon Axial Lead	8.2 k ohm 1/6 W ±5% Taping		BRFT618224Z
R363	Carbon Axial Lead	3.3 k ohm 1/6 W ±5% Taping		BRFT613324Z
R364	Carbon Axial Lead	10 k ohm 1/6 W ±5% Taping		BRFT611034Z
R365	Carbon Axial Lead	6.8 k ohm 1/6 W ±5% Taping		BRFT616824Z
R366	Carbon Axial Lead	12 k ohm 1/6 W ±5% Taping		BRFT611234Z
R367	Carbon Axial Lead	1 k ohm 1/6 W ±5% Taping		BRFT611024Z
R368	Carbon Axial Lead	220 ohm 1/6 W ±5% Taping		BRFT612214Z
R369	Carbon Axial Lead	100 k ohm 1/8 W ±5% Taping		BRFT181044Z
INTEGRATED CIRCUITS				
IC301		L7808CV		BDEY0924001
IC302		SM5152A1		BDEY1020001
IC303		M54460L		BDEY1108001
IC304		S042P		BDEY0132001
IC305		PLL0305A		BDEY1084001
IC306		S042P		BDEY0132001
IC307		NJM4558S		BDEY0218001
VARIABLE RESISTORS				
VR301	Semi-fixed	RT-182 TT24R100B		BRTY0182101
VR302	Semi-fixed	RT-182 TT24R100B		BRTY0182101
VR303	Semi-fixed	RT-182 TT24R10KB		BRTY0182103
VR304	Semi-fixed	RT-182 TT24R 5KB		BRTY0182502

REF. NO.	DESCRIPTION		RS PART NO.	MFR'S PART NO.
MISCELLANEOUS				
J301	Jack	JK-326		BJKY0326001
J302	Jack	JK-276 5267-08A		BJKY0276008
J303	Jack	JK-276 5267-03A		BJKY0276003
X301	Crystal	QX-122 10.2417		BQXY0122001
X302	Crystal	QX-287 22.0MHZ		BQXY0287001

MICROPROCESSOR PCB ASS'Y

REF. NO.	DESCRIPTION		RS PART NO.	MFR'S PART NO.
	ASSEMBLY, PCB, MICROPROCESSOR Consists of the following:			AT553ZTBED
PC BOARD				
B401	PC BOARD MICOM PB-132AA			BPBY0132AAZ
CAPACITORS				
The following codes indicate variations of capacitors against temperatures; **YA** = ±5%, **YB** = ±10%, **YD** = +20 −30%, **YE** = +20 −50% (−25 ∼ +85°C), **ZF** = +30 −80% (−10 ∼ +70°C), **CH** = 0 ± 60ppm/°C, **RH** = 220ppm/°C ± 60ppm/°C, **TH** = −470ppm/°C ± 60ppm/°C, **SL** = +350ppm/°C ∼ −1000ppm/°C, **UJ** = −750ppm/°C ± 120ppm/°C				
C401	Electrolytic	47 μF 16 V ±20% C-156		BCAZ314706Z
C402	Ceramic M/L (3216)	0.022 μF 50 V ±10% C(B) Taping		BCXE812235Z
C403	Ceramic	0.01 μF 50 V ±20% YD(D)		BCKD811036Z
C404	Ceramic M/L (3216)	47 pF 50 V ±5% UJ Taping		BCXP814704Z
C405	Ceramic M/L (3216)	47 pF 50 V ±5% UJ Taping		BCXP814704Z
C406	Ceramic Melf	0.01 μF 16 V ±20% Y C-140 Taping		BCVQ311036Z
C407	Electrolytic	2.2 μF 50 V +80/−20%		BCEL812290Z
C408	Electrolytic	0.1 μF 50 V +80/−20%		BCEL811080Z
C409	Electrolytic	0.1 μF 50 V +80/−20%		BCEL811080Z
C410	— Not Used —			
C411	Electrolytic	0.1 μF 50 V +80/−20%		BCEL811080Z
C412	Electrolytic	470 μF 10 V ±20% C-156		BCAZ114706Z
C413	Electric Double Layer	0.047 F 5.5 V CZ-127		BCZY0127001
C414	Electrolytic	47 μF 16 V ±20% C-156		BCAZ314706Z
C415	Ceramic Melf	0.01 μF 16 V ±20% Y C-140 Taping		BCVQ311036Z
C416	Electrolytic	4.7 μF 50 V +80/−20%		BCEL814790Z
C417	Semi-conductor (SR)	0.01 μF 25 V ±10%		BCGC511035Z
C418	Electrolytic	22 μF 10 V +80/−20%		BCEL112200Z
C419	Ceramic Melf	0.01 μF 16 V ±20% Y C-140 Taping		BCVQ311036Z

REF. NO.	DESCRIPTION		RS PART NO.	MFR'S PART NO.
DIODES				
D401	Silicon	RLS4148 Taping		BDAY0433001
D402	Silicon	1N4003		BDAY0133001
D403	Silicon	1N4003		BDAY0133001
D404	Silicon	1N4003		BDAY0133001
D405	Silicon	RLS4148 Taping		BDAY0433001
D406	Silicon	RLS4148 Taping		BDAY0433001
D407	Zener	HZ-6A2		BDAY0269018
D408	Silicon	RLS4148 Taping		BDAY0433001
D409	Silicon	RLS4148 Taping		BDAY0433001
TRANSISTORS				
Q401	Silicon NPN	DB-743 2SC2812-L5 Taping		BDBC2812642
Q402	Silicon PNP	DB-048 2SA1179-M6 Taping		BDBA1179643
Q403	Silicon NPN	DB-743 2SC2812-L5 Taping		BDBC2812642
Q404	Silicon NPN	DB-743 2SC2812-L5 Taping		BDBC2812642
RESISTORS				
R401	Carbon Melf Chip	10 k ohm 1/8 W ±5% Taping		BRFD181034Z
R402	Carbon Melf Chip	10 k ohm 1/8 W ±5% Taping		BRFD181034Z
R403	Carbon Melf Chip	10 k ohm 1/8 W ±5% Taping		BRFD181034Z
R404	Carbon Melf Chip	220 k ohm 1/8 W ±5% Taping		BRFD182244Z
R405	Carbon Melf Chip	10 k ohm 1/8 W ±5% Taping		BRFD181034Z
R406	Carbon Melf Chip	2.2 k ohm 1/8 W ±5% Taping		BRFD182224Z
R407	— Not Used —			
R408	— Not Used —			
R409	— Not Used —			
R410	— Not Used —			
R411	Carbon Melf Chip	5.6 k ohm 1/8 W ±5% Taping		BRFD185624Z
R412	Carbon Melf Chip	100 k ohm 1/8 W ±5% Taping		BRFD181044Z
R413	Carbon Melf Chip	100 k ohm 1/8 W ±5% Taping		BRFD181044Z
R414	Carbon Melf Chip	1 M ohm 1/8 W ±5%		BRFD181054Z
R415	Carbon Melf Chip	100 k ohm 1/8 W ±5% Taping		BRFD181044Z
R416	Carbon Melf Chip	1 k ohm 1/8 W ±5% Taping		BRFD181024Z
R417	Carbon Melf Chip	10 k ohm 1/8 W ±5% Taping		BRFD181034Z
R418	Carbon Melf Chip	10 k ohm 1/8 W ±5% Taping		BRFD181034Z
R419	Carbon Melf Chip	10 k ohm 1/8 W ±5% Taping		BRFD181034Z
R420	— Not Used —			
R421	Carbon Melf Chip	100 k ohm 1/8 W ±5% Taping		BRFD181044Z
R422	Carbon Melf Chip	10 k ohm 1/8 W ±5% Taping		BRFD181034Z
R423	Carbon Melf Chip	1.5 k ohm 1/8 W ±5% Taping		BRFD181524Z
R424	Carbon Melf Chip	10 k ohm 1/8 W ±5% Taping		BRFD181034Z
R425	Carbon Melf Chip	10 k ohm 1/8 W ±5% Taping		BRFD181034Z
R426	Carbon Melf Chip	1 k ohm 1/8 W ±5% Taping		BRFD181024Z
R427	Carbon Melf Chip	1 k ohm 1/8 W ±5% Taping		BRFD181024Z
R428	Carbon Melf Chip	10 k ohm 1/8 W ±5% Taping		BRFD181034Z
R429	Carbon Melf Chip	5.6 k ohm 1/8 W ±5% Taping		BRFD185624Z

REF. NO.	DESCRIPTION		RS PART NO.	MFR'S PART NO.
R430	— Not Used —			
R431	Carbon Melf Chip	1.5 k ohm 1/8 W ±5% Taping		BRFD181524Z
INTEGRATED CIRCUITS				
IC401	LCD Driver	LH5008TP		BDEY1021001
IC402	Micro Processor	UC1208		BDEY1332001
IC403	Gate	HD14093BP		BDEY1155001
IC404	Reset	M51953BL		BDEY1098001
IC405	Regulator	L78M05CV		BDEY0995001
MISCELLANEOUS				
LC401	Liquid Crystal Display	DL-032		BDLY0032001
RR401	R Array	HA-117		BHAY0117001
RR402	R Array	HA-121 8R1W		BHAY0121001
RR403	R Array	HA-100 6R1M 47K		BHAY0100001
RR404	R Array	HA-100 6R1M 47K		BHAY0100001
RR405	R Array	HA-099 4R1M 47K		BHAY0099001
RR406	R Array	HA-100 6R1M 47K		BHAY0100001
Y401	Ceramic Resonator	YY-548 CSA2.000MK		BYYY0548001

MISCELLANEOUS

REF. NO.	DESCRIPTION		RS PART NO.	MFR'S PART NO.
F501	Fuse	FS-015 6A		BFSY0015609
J501	Jack	JK-426 M-RM-L		BJKY0426001
J502	Jack	JK-467		BJKY0467001
J503	Jack	JK-052 Black		BJKY0052002
J504	Jack	JK-010 W/O Washer		BJKY0010004
Q501	Transistor	DB-331 2SC2166-C		BDBC2166103
Q502	Transistor	DB-529 MRF-477		BDBZ0529001
FC501	Flact Cable	WF-0643- 70- 3		BWFY0640709
FC502	Flat Cable	WF-059 3- 90-3		BWFY0590909
IC501	Integrated Circuit	L7808CV		BDEY0924001
MC501	Microphone	MK-389		BMKY0389001
PL501	Pilot Lamp	PL-103		BPLY0103001
SP501	Speaker	SP-181		BSPY0181001
VR501	Resistor Variable	RV-693 1KB		BRVY0693001
VR502	Resistor Variable	RV-69210KB		BRVY0692001
VR503	Resistor Variable	RV-650 VB12L PVB20F B50K		BRVY0650001
VR504	Resistor Variable	RV-68650KA		BRVY0686001
YI501	Insulation Sheet	YD-010 P101KD		BYDY0010003
YI502	Bushing Tight Ceramic	YY-172		BYYY0172001
YI503	Bushing Tight Ceramic	YY-172		BYYY0172001
YW501	Wire Clamper	YY-047		BYYY0047001
YW502	Wire Clamper	YY-047		BYYY0047001

REF. NO.	DESCRIPTION		RS PART NO.	MFR'S PART NO.
YW503	Wire Clamper	YY-047		BYYY0047001
W501	Wire	UL 1007 —26 10- 60-10 GRY		CUHH006044Z
W502	Wire	UL 1007 —26 10-150-10 BRN		CUHA015044Z
W503	Wire	UL 1007 —26 10- 80-10 VIO		CUHG008044Z
W504	Wire	UL 1007 —263- 30- 3 WHT		CUHJ003011Z
W505	Wire	UL 1007 —265- 50- 5 ORG		CUHC005022Z
W506	Wire	UL 1007 —263- 70- 3 BLU		CUHF007011Z
W507	Wire	UL 1007 —26 10-120-10 ORG		CUHC012044Z
W508	Wire	UL 1007 —26 10- 70-10 WHT		CUHJ007044Z
W511	Wire	UL 1007 —26 10- 30- 3 GRY		CUHH003041Z
W512	Wire	UL 1007 —263-160- 3 BLK		CUHK016011Z
W513	Wire	UL 1007 —263-160- 3 WHT		CUHJ016011Z
W514	Wire	UL 1007 —223- 50- 3 BLK		CUCK005011Z
W515	Wire	UL 1007 —223- 50-3 RED		CUCB005011Z
W521	Wire	UL 1007 —26 10- 60-10 ORG		CUHC006044Z
W522	Wire	UL 1007 —26 10-100-10 BLU		CUHF010044Z
WA501	Cord	WZ-229110		BWZY0229001
WA502	Wires Assembled	W-071447		CZDZ071447Z
WA503	Wires Assembled	W-071448A		CZDZ071448A
WA504	Wires Assembled	W-071449		CZDZ071449Z
WA505	Wires Assembled	W-071461		CZDZ071461Z
WA506	Wires Assembled	W-071389		CZDZ071389Z
WA507	Wires Assembled	W-071459		CZDZ071459Z
WA511	Wires Assembled	W-0702341500 W/P		CZDZ070234Z

SUBSTITUTION PARTS

REF. NO.	DESCRIPTION		RS PART NO.	MFR'S PART NO.
	(Original) Diode Zener	HZ3B3		BDAY0269003
	(Sub.) Diode Zener	HZ3B1		BDAY0269007
	(Sub.) Diode Zener	HZ3B-2		BDAY0269044
	(Original) Diode Zener Silicon	RLS4148 Taping		BDAY0433001
	(Sub.) Diode	QDS955 Taping		BDAY0442002
	(Original) Diode Zener	1SS133 Taping		BDAY0497001
	(Sub.) Zener	1N4531 Taping		BDAY0498001
	(Sub.) Zener	1SS119 Taping		BDAY0499001
	(Original) Transistor	DB-743 2SC2812-L5 Taping		BDBC2812642
	(Sub.) Transistor	DB-381 2SC2712-Y Taping		BDBC2712124
	(Original) Transistor	DB-743 2SC2812-L5 Taping		BDBC2812642
	(Sub.) Transistor	DB-381 2SC2712-Y Taping		BDBC2712124
	(Original) Transistor	DB-743 2SC2812-L5 Taping		BDBC2812642
	(Sub.) Transistor	DB-381 2SC2712-Y Taping		BDBC2712124

EXPLODED VIEW

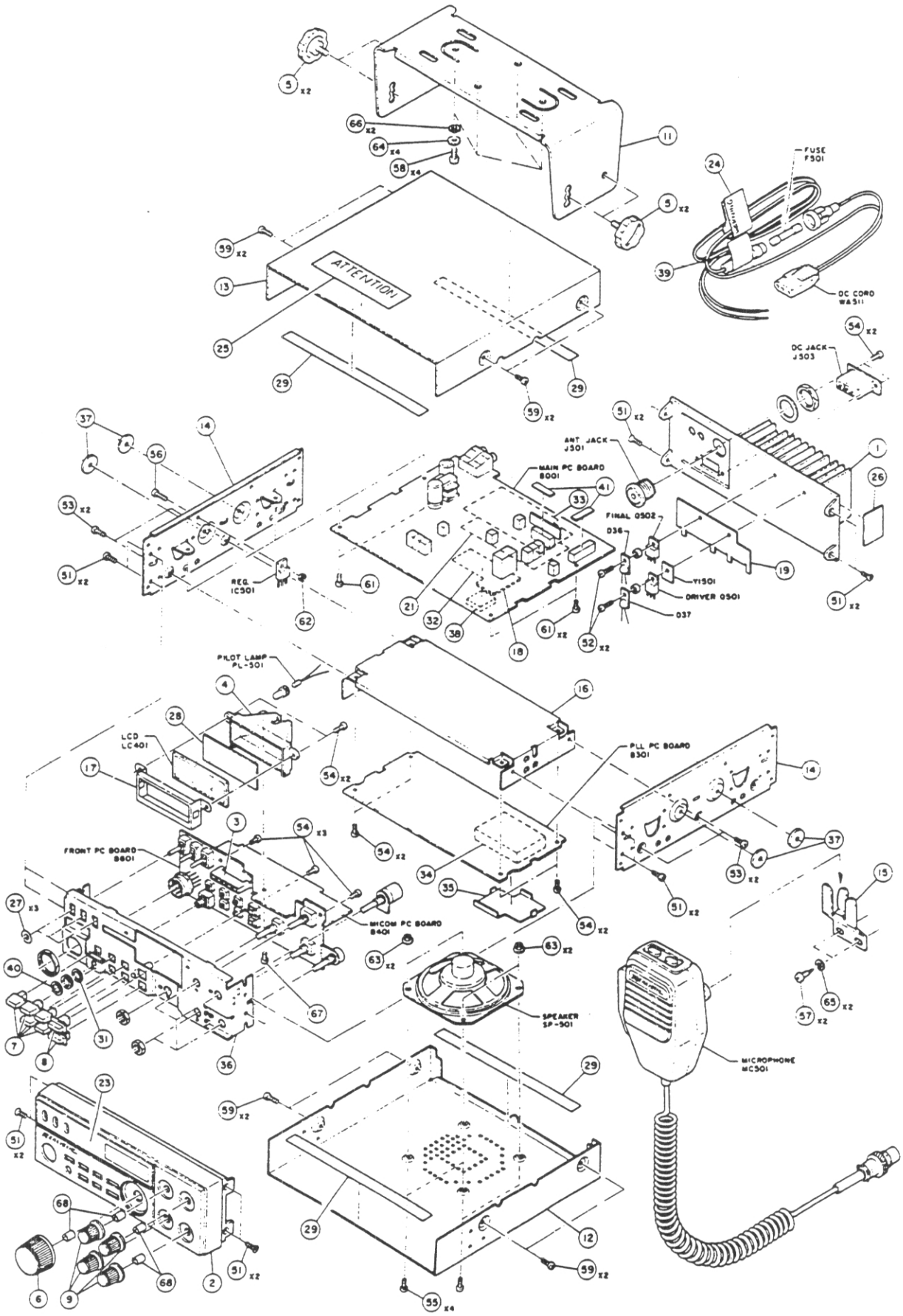

MECHANICAL PARTS LIST

REF. NO.	DESCRIPTION		RS PART NO.	MFR'S PART NO.
1	Chassis, Rear	ADC-12, Paint Black		FCSR291429Z
2	Panel, Front	ABS, Inst CLR Paint, Silk		GCMF191420Z
3	Holder, LED	ABS, Black		GHDL391423Z
4	Holder, LCD	ABS, White		GHDZ391422Z
5	Screw, Mounting	ABS, Black ×4		GMSC480407Z
6	Knob, Channel	ABS, Dark Gray		GNBC421145Z
7	Knob, Push	ABS, Dark Gray ×5		GNBP421146Z
8	Button, Channel	ABS, Dark Gray ×2		GNBP491421Z
9	Knob	ABS, Dark Gray ×4		GNBY491435Z
10	— Not Used —			
11	Mounting Bracket	SPCC 1.6T Paint Dark Gray		HBCT380105A
12	Case, Bottom	Vinytop, SB-K08, 1.0T, Black		HCMB221190A
13	Case, Top	Vinytop, SB-K08, 1.0T, Black		HCMT221191Z
14	Chassis, Side	SECC, 1.0T, Non Oil ×2		HCSS321192B
15	Hanger, Microphone	SPCC, 1.0T, NI		HMHG402919Z
16	Shield Case	SECC, 0.8T		HSDC391814Z
17	Frame, LCD	SPTE, 0.3T, Non Oil		HSDP391427Z
18	Shield Plate	SPT, 0.3T, Non Oil		HSDC491867Z
19	Shield Plate	SPTE 0.3T Non Oil		HSDP491777Z
20	— Not Used —			
21	Shield Plate	SPTE, 0.3T Non Oil		HSDP491778Z
22	— Not Used —			
23	Plate, Display	PC, Silk		KDPT391428Z
24	Label, Warning, DC Cord	Paper Print		PLBC482147Z
25	Label, Caution	Polyester Film, 0.05T		PLBC491431Z
26	Label, Rear	Polyester Film, 0.1T		PLBF391430Z
27	Blind	Himelon, 0.6T, Black × 3		RBLD491562Z
28	Plate, LCD	Yupo Paper, 0.15T		RETC491436Z
29	Wool-Coated Paper Wool Tack	Wool Paper, 10*150*0.3T ×4		RUTC403865Z
30	— Not Used —			
31	Washer, Insulation	PVC, 0.5T, Black		RWSR491537Z
32	Insulation Plate	PVC, 0.35T		RZEB491868Z
33	Insulation Plate	PVC 0.35T		RZEB491779Z
34	VCO Box	SPET 0.3T Non Oil		HSDC481456Z
35	Cover, VCO Box	SPCC, 0.5T, MFNI		HSDP481457A
36	Chassis, Front (Comp.)	**		ECSF291424Z
37	Spacer	** x 4		RETC491884Z
38	Cushion	Neoprene SP, Black		RCUN491886Z
39	Label, Fuse	Polyester Film, Print		PLBZ491885Z
40	Blind	Himelon, 0.6T		RBLD491911Z
41	Label, NOT ADJ	Paper 5.5 * 19 × 2		PLBZ491330Z
51	Screw, Flat HD +	M3 × 5 NI × 12		SSCW133005N
52	Screw, Bind HD +	M2 × 12 NI × 2		SSCW192012N
53	Screw, Bind HD +	M3 × 5 NI × 4		SSCW193005N
54	Screw, Bind HD +	M3 × 6 NI × 12		SSCW193006N
55	Screw, Bind HD +	M3 × 8 BNI × 4		SSCW193008B
56	Screw, Bind HD +	M3 × 8 NI		SSCW193008N
57	Screw, Tapping Round HD+	D3.5 × 8 NI × 2		SSCW293508N
58	Screw, Tapping Round HD+	D5 × 10 NI × 4		SSCW295010N
59	Screw, Taptight Bind HD+	M3 × 6 BNI × 8		SSCW343006B

REF. NO.	DESCRIPTION		RS PART NO.	MFR'S PART NO.
60	— Not Used —			
61	Screw, Taptight Bind HD+	M3 × 6 NI × 4		SSCW343006N
62	Hex Nut	M3.0 NI		SSCW430030N
63	Nut, Flange	M3 ZMC ×4		SSCW480030Z
64	Washer, Flat	D5 NI ×4		SSCW490050N
65	Washer, Lock	D3.5 NI ×2		SSCW530035N
66	Washer, Star	D5 NI ×4		SSCW540050N
67	Screw, P Tight Bind HD+	D3 × 8 NI		SSCW803008N
68	Spring, Plate Knob	D6.02 × L9.53 × 5		TSTD0200003
	Panel Ass'y, Front	(Ref. No. 2 and 23)		PNFR553ZTASY
	Chassis Ass'y, Front	(Ref. No. 36, 4, 17 and 28)		CHFR553ZTASY
	Ass'y, Case	(Ref. No. 12, 13 and 29)		CASE553ZTASY
	Ass'y, Mounting Bracket	(Ref. No. 5 and 11)		MTBR553ZTASY
	Chassis Ass'y, Rear	(Ref. No. 1 and 19)		CHSSRR553ZTASY

TRANSISTOR VOLTAGE CHART

REF. No.	MODE	Base	Collector	Emitter
Q1	RX NB ON	1.5	7.0	0.9
Q2	RX NB ON	0.7	2.3	0
Q3	RX NB ON	2.3	6.9	1.5
Q4	RX NB ON	0	7.2	0.9
Q5	RX NB ON	0	4.2	0
Q6	RX NB ON	4.4	0	6.5
Q7	RX NB ON	0	0	0
Q8	RX	0	7.2	3.2
Q11	RX	1.5	4.5	1.0
Q12	RX SQ OFF	0	0	0
	RX SQ ON	0.6	0	0
Q13	RX	2.4	6.6	1.8
Q14	RX	0	6.3	2.8
Q15	RX	1.3	7.6	0.6
	TX	0	7.6	0
Q16	RX	0.7	3.0	0
	TX	0	0	0
Q17	RX	3.0	6.5	2.3
	TX	0	0	0
Q18	RX	2.3	6.5	1.6
	TX	0	0	0
Q19	RX SSB	7.3	0	7.7
	RX CW	7.0	7.7	7.7
Q21	RX SSB	7.3	7.7	7.0
	RX CW	0	7.7	0
Q22	RX SSB	0	7.3	0
	RX CW	0.6	0	0
Q23	RX/TX	2.6	7.2	2.4
Q24	RX/TX	0	0	0
Q25	RX/TX	7.2	0	7.7
Q26	RX/TX	0	7.2	2
Q27	RX	6.9	7.8	7.4
	RX	0	7.8	0
Q28	TX SSB	0	0	0
	TX CW	0.6	0	0
Q29	RX	9.1	0	7.6
	TX	6.9	7.5	7.8
Q30	RX/TX	0.7	0	0
Q31	RX	0	7.5	0
	TX	0.7	0	0
Q32	TX	0	2.6	0

REF. No.	MODE	Base	Collector	Emitter
Q33	TX	1.3	7.5	0.6
Q34	TX	3	4.2	2.2
Q35	TX SSB	0	0	0
	TX CW	0.7	0	0
Q36	TX SSB	0	0	0
	TX CW	4.4	7.2	6.6
Q37	TX SSB	0.6	2	0
	TX CW	0.6	0	0
Q38	TX SSB	0	4	0
	TX CW	6	5.6	6.6
Q39	RX	0.6	0	0
	TX	5.0	7.5	4.8
Q301	RX/TX	2.9	5.3	2.2
Q302	RX/TX	2.3	7.6	2.4
Q303	RX/TX	0.7	5.7	0
Q304	RX/TX	1.3	7.8	0.7
Q305	RX/TX	4.3	5.3	3.6
Q306	RX/TX	3.9	6.8	3.3
Q307	RX/TX	3.7	4.7	3.0
Q308	RX/TX	3.6	3.7	2.9
Q309	RX/TX	2	7.4	1.4
Q401	RX	0	7.5	0
	TX	0.6	0	0
Q403	RX/TX	0	5	0
Q402	RX	4.8	0	4.8
	60ms With the power switch ON.			
Q404	RX	0	5	0
	Base	0 1.5VP-P		
	Collector	5VP-P		
	Emitter	DOWN, STOP, STEP, 500k 0		
		Up, MEMO		
Q501	TX	0.65	13.2	0
Q502	TX	0.62	13.2	0

IC VOLTAGE CHART

REF. No.	MODE	Pin No. #1	#2	#3	#4	#5	#6	#7	#8	#9
IC1	RX	0.5	0.3	0.3	0	0	1.2	0	7.7	
	RX SQ	0.5	0.3	0.3	0	3	1.2	6.4	7.7	
IC2	RX	2.8	3.2	3.2	0	5.6	7.1	6.3		
	TX	2.8	3.1	3.0	0	5.5	7	4		
	RX	7.3	1.4	6.2	3.8	0	3.5	6.7	1.4	7.3
IC3	TX SSB	7.4	4	3.8	3.8	0	3.5	2.0	6.6	7.3
	TX CW	7.4	1.4	6.8	3.8	0	3.5	2.0	6.6	7.3
IC5	RX	6.8	13.6	12	2.4	0	2.7	2.1	1.7	
	TX	10.8	13.6	12	2.4	0	3.0	4.3	3.5	
IC6	TX	5.8	0.8	0	0	0	2.7	4.1	4.1	7.2
IC404	RX	5	0	0	1.1	5				
IC405	RX	13.6	0.6	5.6						
IC501	RX	13.6	0	8						
IC601	RX	7.5	7.5	7.5	7.5	0	7.5	0	0	0

REF. No.	MODE	Pin No. #1	#2	#3	#4	#5	#6	#7	#8	#9	#10	#11	#12	#13	#14	#15	#16	#17	#18
IC301	RX	13.6	0	7.8															
IC302	RX	2	2.6	4.8	1.3	0	2.2	0	0	0									
IC303	RX	0	0	0	1.6	1.6	4.8	2.9	0.7										
IC304	RX	0	5.1	7.8	0	7.8	0	2.8	2.8	0	0.7	1.3	0.6	1.3	0				
IC305	RX	4.8	0	4.8	4.8	4.8	0	0	4.8	1.0	0	0	0	3.9	0	2.0	2.4	1.0	0
IC306	RX	0	4.9	7.8	0	7.8	0	2.8	2.6	0	0.6	1.3	0.7	1.3	0				
IC307	RX	7.8	3.5	4.3	4.3	0	4.0	4.0	※	7.8	※ 3.4 at 28 MHz 4.5 at 29 MHz 5.5 at 29.699 MHz								

REF. No.	Pin No. #1	#2	#8	#9	#15	#16	#17
IC302	4.2Vp-p 10.2399 MHz	3.8Vp-p 10.24 MHz					
IC305			3.5VP-P	0.4Vp-p, 7.2 MHz at 29 MHz 0.7Vp-p 6.2 MHz at 28 MHz 0.2Vp-p 7.890 MHz at 29.699 MHz	4.1Vp-p 10.2399 MHz	2.6Vp-p 10.2400 MHz	1.7Vp-p 10.2400 MHz

INTEGRATED CIRCUIT

IC401		
PIN NO		Voltage
1		7ms, 5V, 0V
2		5V, 0V
3		3.4
4		1.7
5		0
6		5.0
7		0
8	5	LCD Change
9	0	LCD Change
10	5	LCD Change
11	0	LCD Change
12	0	LCD Change
13	5	5V, LCD Change, 0V

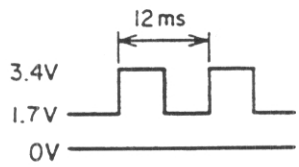

PIN 19 ~ 27
42 ~ 44
47, 49, 50, 51

Figure 1

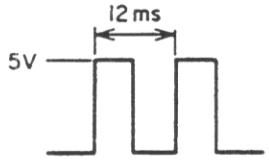

PIN 28, 30, 37

Figure 2

Figure 3

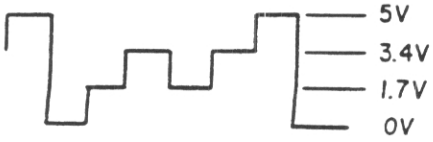

Figure 4

IC401	
PIN NO	Voltage
14	0
15	Refer to figure 5.
16	Refer to figure 5.
17	Refer to figure 5.
18	Refer to figure 5.
19	Refer to figure 1.
20	Refer to figure 1.
21	Refer to figure 1.
22	Refer to figure 1.
23	Refer to figure 1.
24	Refer to figure 1.
25	Refer to figure 1.
26	Refer to figure 1.
27	Refer to figure 1.
28	Refer to figure 2.
29	Refer to figure 3.
30	Refer to figure 2.
31	Refer to figure 3.
32	Refer to figure 3.
33	5
34	Refer to figure 3.
35	Refer to figure 3.
36	Refer to figure 3.
37	Refer to figure 2.
38	Refer to figure 3.
39	Refer to figure 3.
40	Refer to figure 3.
41	Refer to figure 4.
42	Refer to figure 1.
43	Refer to figure 1.
44	Refer to figure 1.
45	Refer to figure 3.
46	Refer to figure 4.
47	Refer to figure 1.
48	Refer to figure 4.
49	Refer to figure 1.
50	Refer to figure 1.
51	Refer to figure 1.
52	9ms, 5V, 0V

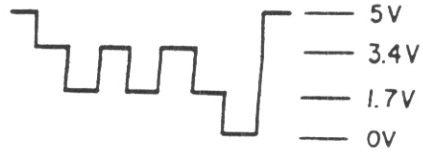

Figure 5

INTEGRATED CIRCUIT

IC402

PIN NO	Voltage		PIN NO	Voltage	
1	5		16	5	(F.Knob)
2	5		17	0	(F.Knob)
3	5		18	0	
4	5	UP/ DOWN, STEP, MEMO, MODE STORE	19	3.8	
5	5		20	0	
6	5		21	0	
7	5		22	0	(Freq. & TxRx Change)
8	500K STEP DOWN ON	MEMO UP STORE MODE ON	23	0	(Freq. & TxRx Change)
9	MEMO UP ON	500K STEP DOWN STORE MODE ON	24	0	(Freq. & TxRx Change)
10	STORE MODE ON	500K STEP DOWN, MEMO, UP ON	25	0	(Freq. & TxRx Change)
11	5		26	5	
12	0		27	5	
13			28	0	
14	0		29	0	
15	0		30	5	

Pin No. \ 0.*kHz	0*	1*	2*	3*	4*	5*	6*	7*	8*	9*
31	0	0	0	0	5	5	5	5	5	5
32	0	5	5	5	0	0	0	5	5	5
33	5	0	5	5	0	5	5	0	5	5
34	5	0	0	5	5	0	5	0	0	5
35	0	0	0	5	0	0	5	5	0	0
36	0	0	0	0	0	5	0	5	0	5

PIN NO	Voltage		PIN NO	Voltage	
37	0		49	0	
38	0		50	5	
39	5	0 (Push Mic up SW)	51	0	
40	5	0 (Push Mic Down SW)	52	5	
41	5	0 (Push PTT ON Tx)	53	5	
42	5	0 (F. LOCK SW ON)	54	5	
43	0	5Vp-p (Power ON)	55	0	LCD Change
44	5				
45	2.5	4Vp-p (2.00 MHz)	56	5 (Tx)	0 (Rx)
46	2.5	5Vp-p (2.00 MHz)	57	5 (Tx)	
47	0		58	5	
48	5				

IC403								
Pin No.	Voltage	Waveform	Pin No.	Voltage	Waveform	Pin No.	Voltage	Waveform
1	5	F. KNOB	6	5		13	5	
2	5		7	5		14	5	
			8	0	F.KNOB			
			9	0				
3	0		10	5				
			11	0				
4	5							
			12	5				
5	0							

SEMICONDUCTOR LEAD IDENTIFICATION

MV-1YH-S

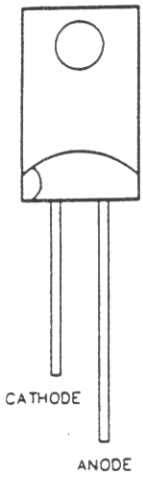

GL8PR26

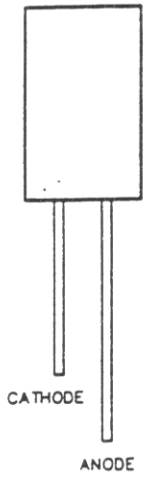

KV1330A

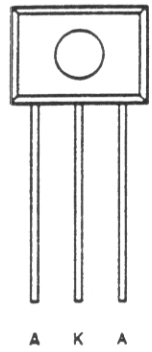

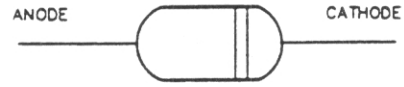

1N4003
HZ5C-1
HZ3B3
1N60 AM
1SV113
1N5401

HZ-6A2
1SS133

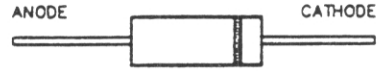

MC-301

KB-262

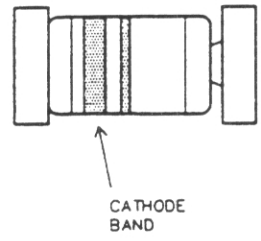

RLS4148

2SC3242A-E

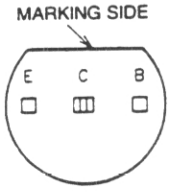

2SC2086-D

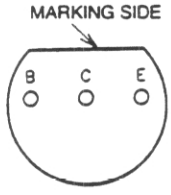

2SC1675-L
2SC1730-L
2SC945A-Q
2SC1674-L
2SC1973-SSB
2SA733A-PB

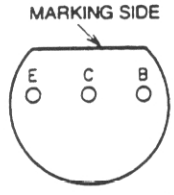

2SB525-E

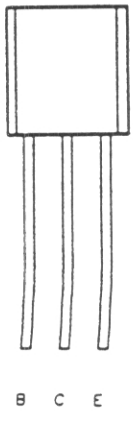

2SC2166-C

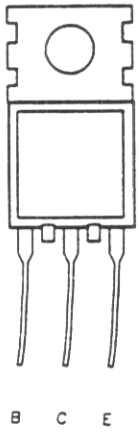

MRF-477

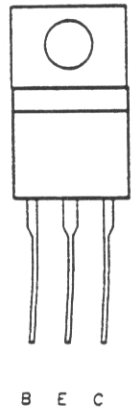

2SK192A-BL

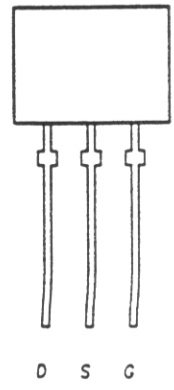

G: GATE
S: SOURCE
D: DRAIN

2SC2712-Y
2SA1179-M6

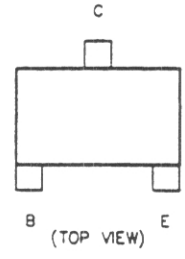

IC INTERNAL DIAGRAM

IC1
M5223L

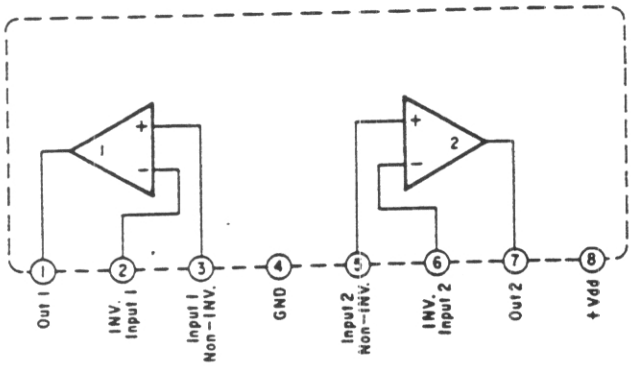

IC601
LB1423N

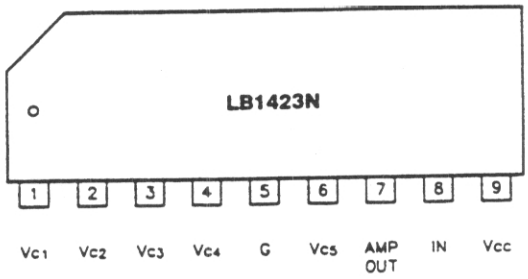

IC301
IC501
L7808CV

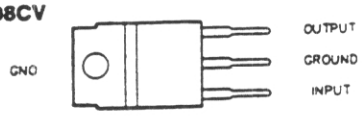

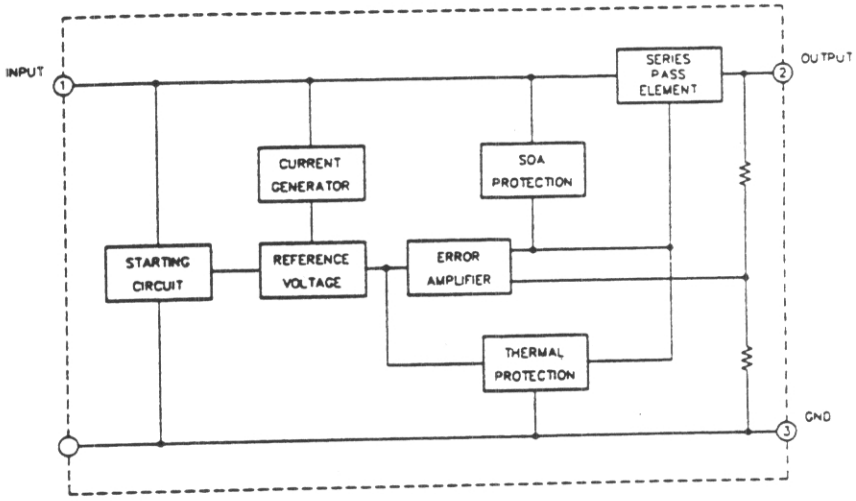

IC402
UC1208

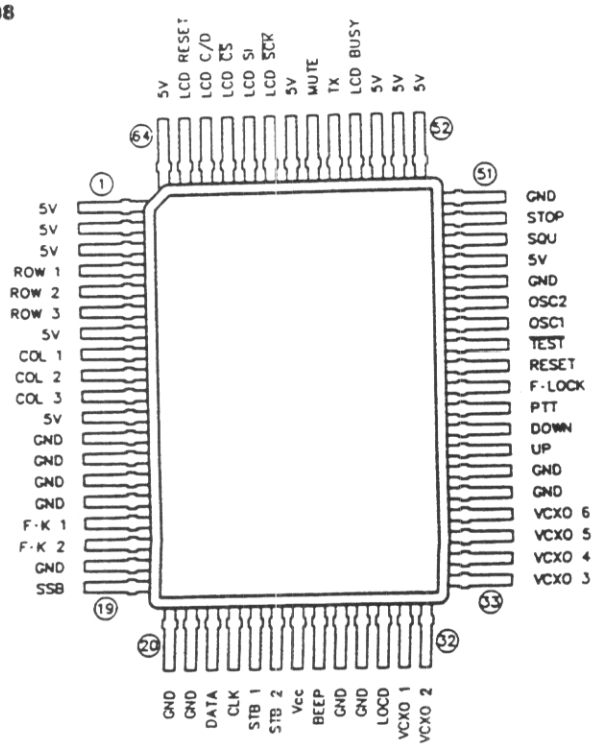

UC1208 Pin Connection

Pin No.	Symbol	I/O	Description	Pin No.	Symbol	I/O	Description
1	5V	–		35	VCXO 5	O	PLL VCXO (No) output
2	5V	–		36	VCXO 6	O	
3	5V	–		37	GND	–	
4	ROW 1	I/O	KEY MATRICSS	38	GND	–	
5	ROW 2	I/O		39	uP	I	Mic up SW input
6	ROW 3	I/O		40	DOWN	I	Mic down SW input
7	5V	–		41	PTT	I	PTT input ON: "L" OFF: "H"
8	COL 1	I/O	KEY MATRICSS				
9	COL 2	I/O		42	F·L·CK	I	F·Lock SW input ON: "L" OFF: "H"
10	COL 3	I/O					
11	5V	–		43	RESET	–	
12	GND	–		44	TEST	–	
13	GND	–		45	OSC 1	–	
14	GND	–		46	OSC 2	–	
15	GND	–		47	GND	–	
16	F·K 1	I	Input F·knob 1	48	5V	–	
17	F·K 2	I	Input F·knob 2	49	SQu	I	SQuelch input IN: "L" NO: "H"
18	GND	–					
19	SSB	I/O	SSB: "L" OTHER: "H"	50	STOP	I	"L": go to STOP Mode
20	GND	–		51	GND	–	
21	GND	–		52	5V	–	
22	DATA	O	PLL DATA(N1N2M1)output	53	5V	–	
23	CLK	O	PLL CLK output	54	5V	–	
24	STB 1	O	PLL LE output	55	LCD BUSY	O	LCD Driver BUSY
25	STB 2	O	PLL ENABLE output	56	Tx	O	Tx/Rx output Tx: "H" Rx: "L"
26	Vcc	–	+5V				
27	BEEP	O	2kHz,50msec output	57	MUTE	O	Mute Output MUTE "H" UNMUTE "L"
28	GND	–					
29	GND	–		58	5V	–	
30	LOCD	O	PLL LOCK Detect LOCK "H" UNLOCK "L"	59	LCD SCK	O	LCD Driver SCK
				60	LCD SI	O	SI
31	VCXO 1	O	PLL VCXO (No) output	61	LCD CS	O	CS
32	VCXO 2	O		62	LCD C/D	O	C/D
33	VCXO 3	O		63	LCD Reset	O	RESET
34	VCXO 4	O		64	5V	–	

IC405
L78M05CV

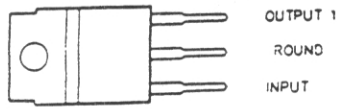

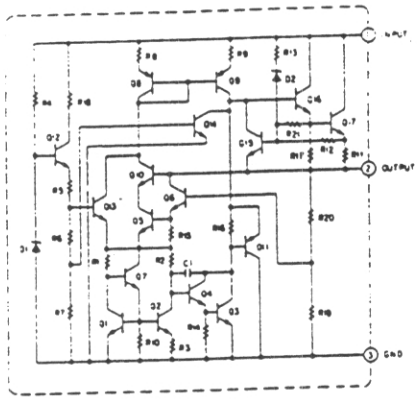

IC302
SM5152A1

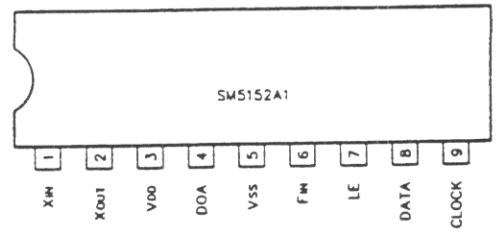

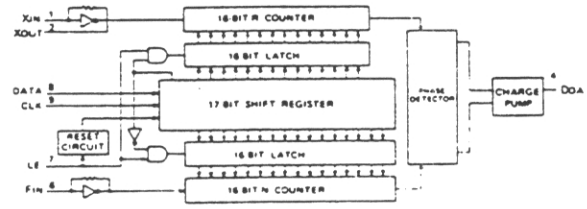

IC303
M54460L

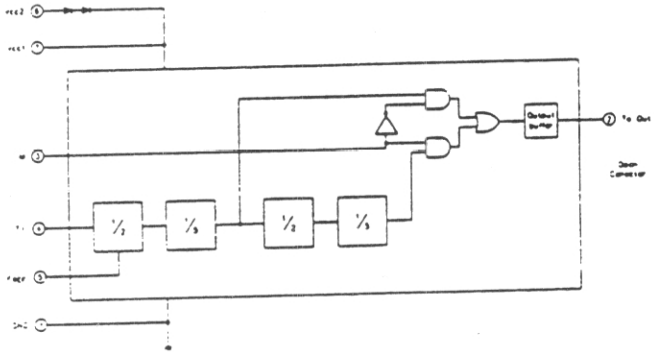

IC307
IC3
NJM4558S

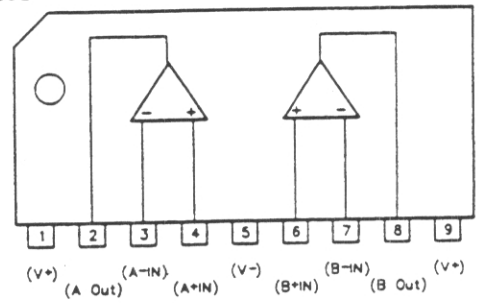

IC306
IC304
SO42P

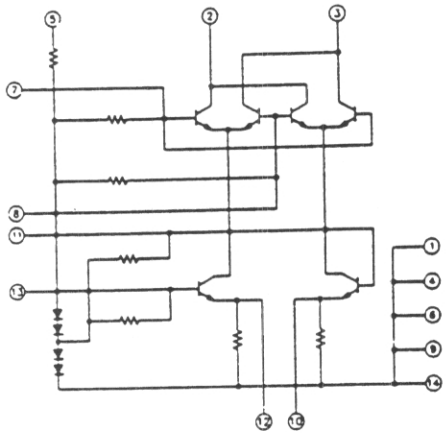

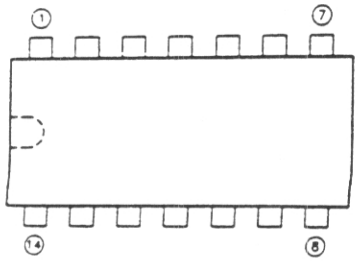

IC305
PLL0305A

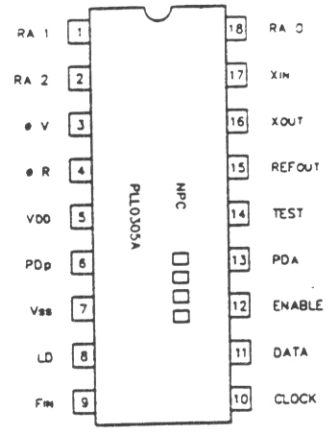

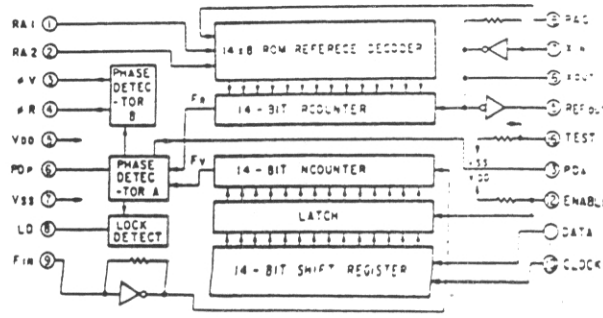

IC2
AN612

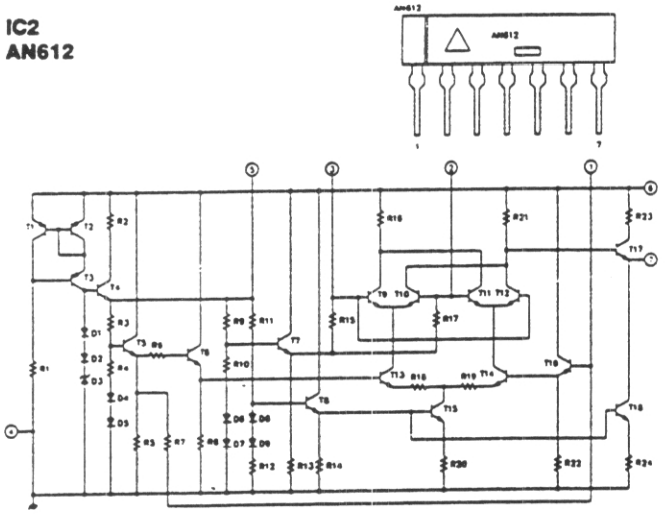

IC401
LH5008TP

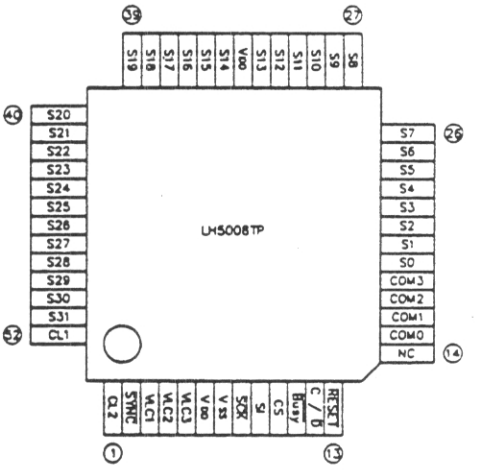

IC404
M51953BL

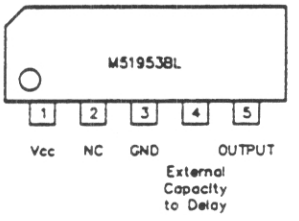

IC6
TA7320P

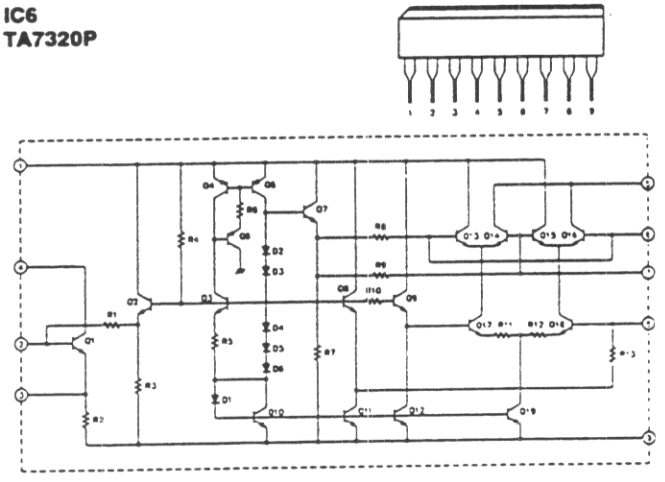

IC5
TDA1905

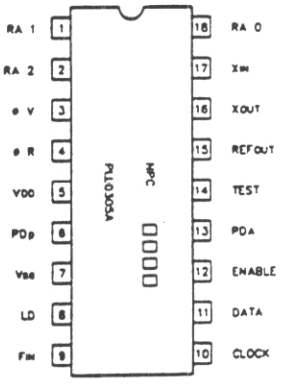

IC403
HD14093BP

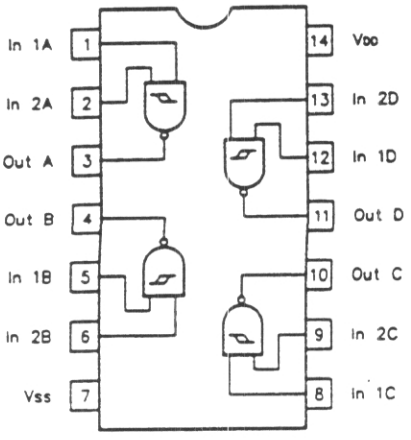

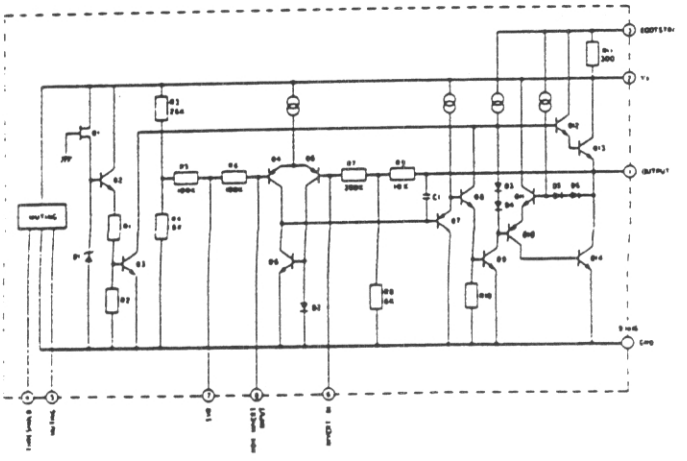

SCHEMATIC DIA

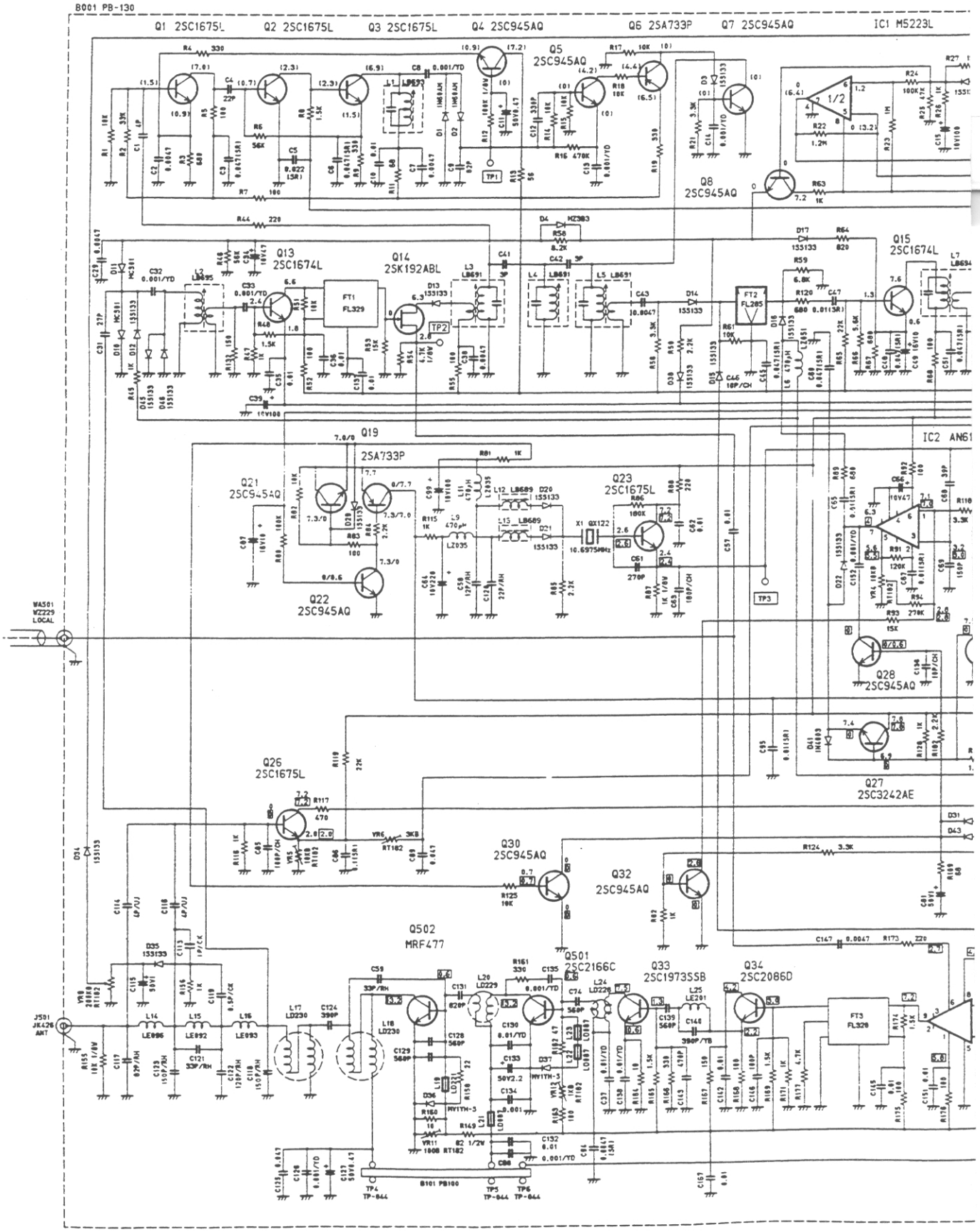

GRAM

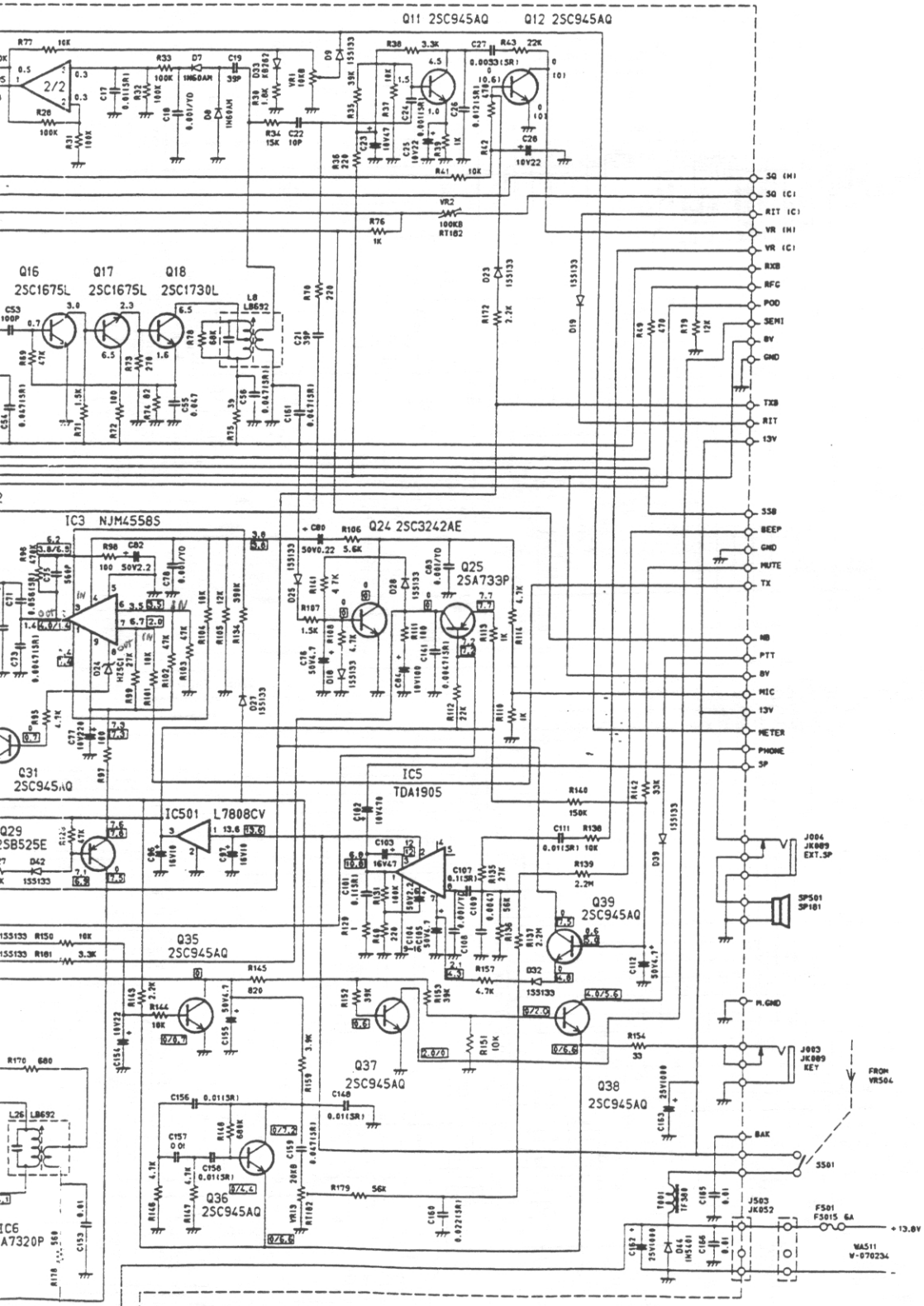

NOTES:
1. RESISTANCE VALUES ARE SHOWN IN OHMS UNLESS OTHERWISE NOTED. (K=KILO OHM. M=MEG OHM)
2. RESISTOR WATTAGES ARE 1/6W UNLESS OTHERWISE NOTED.
3. CAPACITANCE VALUES ARE INDICATED IN MICRO FARADS UNLESS OTHERWISE NOTED. (P=MICRO-MICRO FARAD)
4. ALL CAPACITORS TEMPERATURE CHARACTERISTICS ARE SL (LESS THAN 1000PF).ZF (0.047μF) OR YF (0.001μF~0.039μF) UNLESS OTHERWISE NOTED.
5. DC VOLTAGE IN ▭ SHOWS TX CONDITION.(SSB/CW)
6. DC VOLTAGE IN NO MARK SHOWS RX CONDITION.(SSB/CW)
7. DC VOLTAGE IN ( ) SHOWS RX CONDITION UNDER OPERATION OF EACH FANCTION.

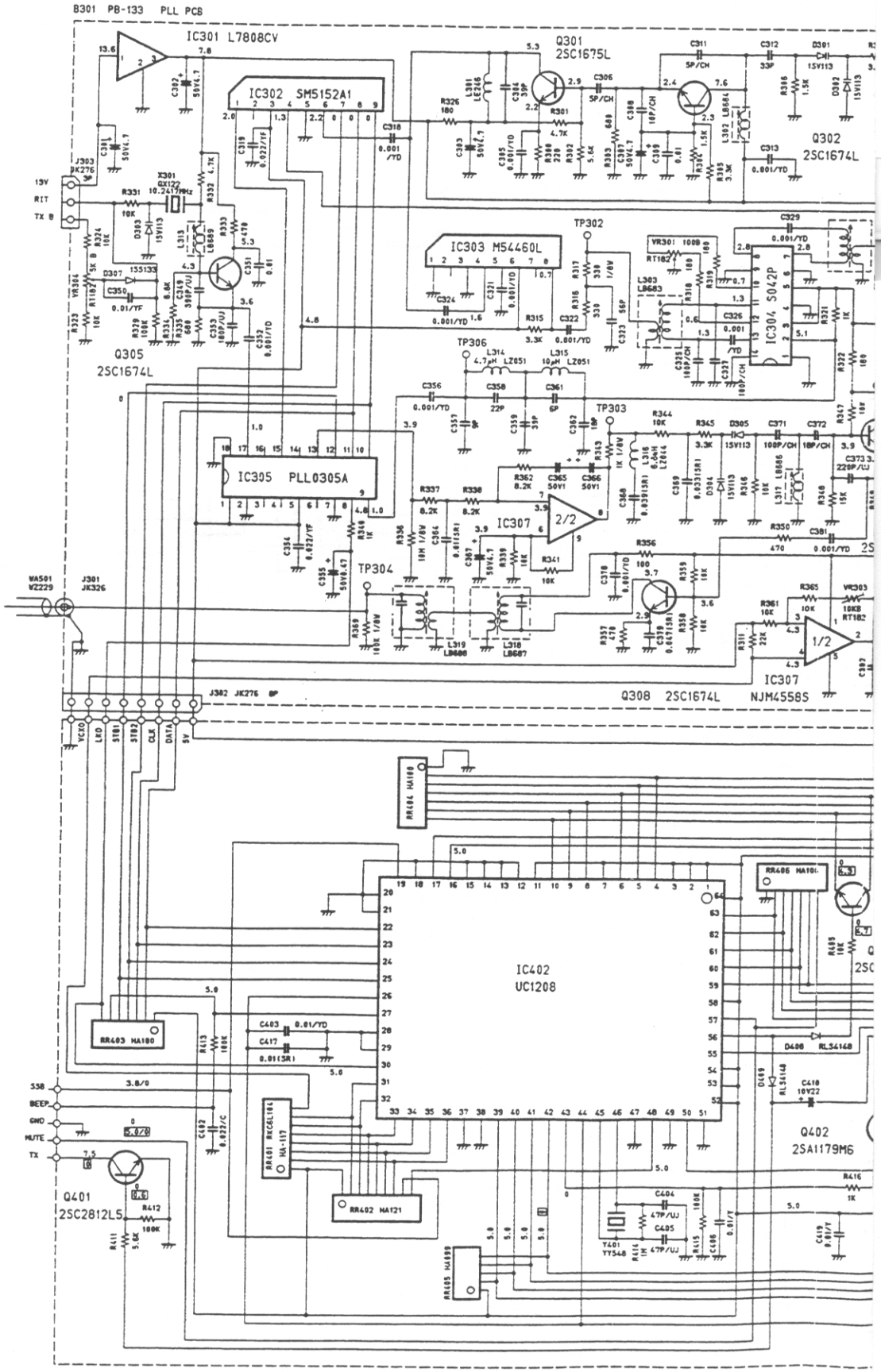
B301 PB-133 PLL PCB
IC301 L7808CV
IC302 SM5152A1
IC303 M54460L
IC304 5042P
IC305 PLL0305A
IC307 NJM4558S
IC402 UC1208
Q301 2SC1675L
Q302 2SC1674L
Q305 2SC1674L
Q308 2SC1674L
Q401 2SC2812L5
Q402 2SA1179M6
TP302
TP303
TP304
TP306
J303 JK276 8P
J301 JK326
J302 JK276 8P
WA501 WZ229
X301 GX127 10.24576MHz
VCXO
LED
STB1
STB2
CLK
DATA
5V
13V
RIT
TX B
SSB
BEEP
GND
MUTE
TX

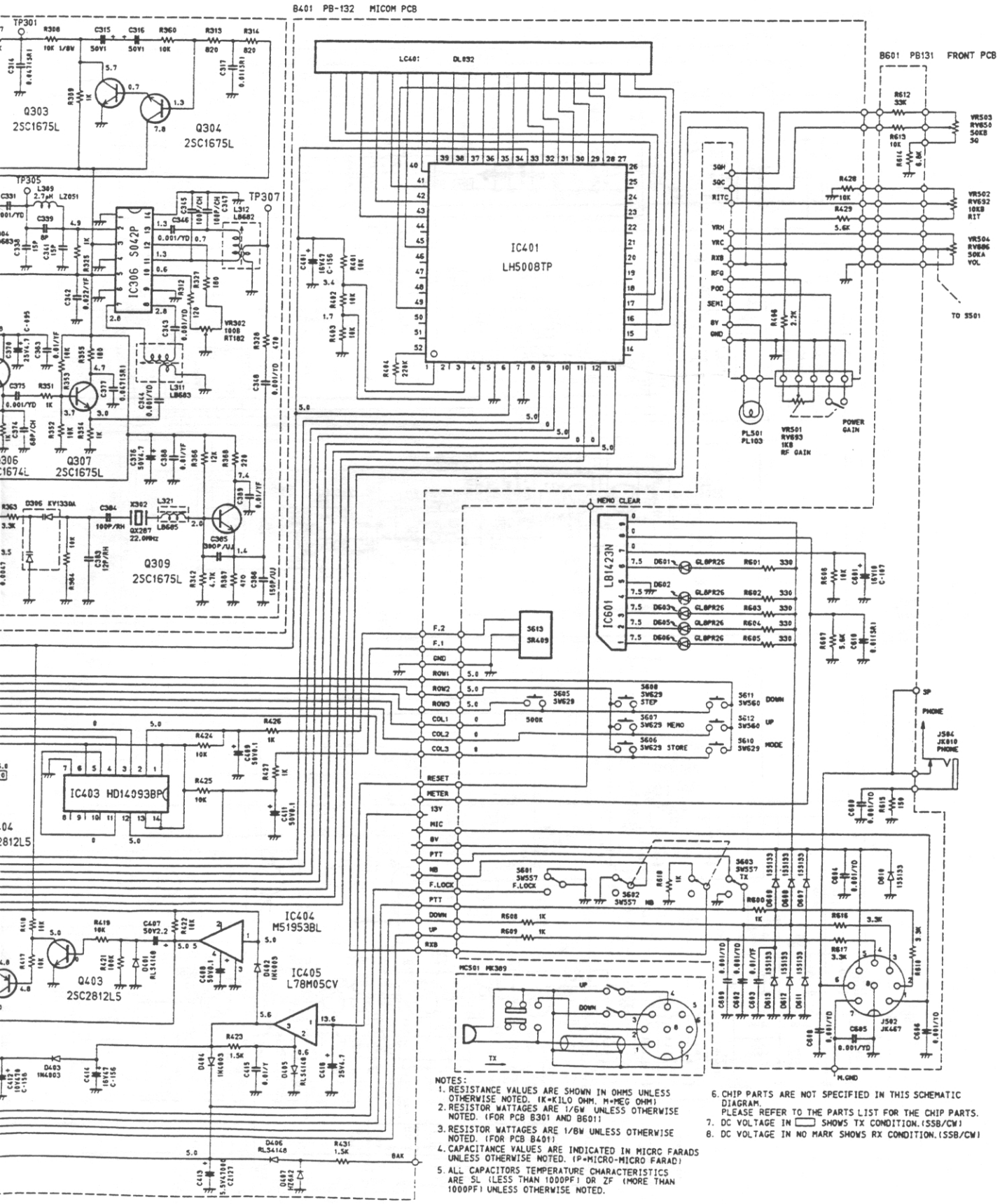

NOTES:

1. RESISTANCE VALUES ARE SHOWN IN OHMS UNLESS OTHERWISE NOTED. (K=KILO OHM, M=MEG OHM)
2. RESISTOR WATTAGES ARE 1/6W UNLESS OTHERWISE NOTED. (FOR PCB B301 AND B601)
3. RESISTOR WATTAGES ARE 1/8W UNLESS OTHERWISE NOTED. (FOR PCB B401)
4. CAPACITANCE VALUES ARE INDICATED IN MICRO FARADS UNLESS OTHERWISE NOTED. (P=MICRO-MICRO FARAD)
5. ALL CAPACITORS TEMPERATURE CHARACTERISTICS ARE SL (LESS THAN 1000PF) OR ZF (MORE THAN 1000PF) UNLESS OTHERWISE NOTED.
6. CHIP PARTS ARE NOT SPECIFIED IN THIS SCHEMATIC DIAGRAM. PLEASE REFER TO THE PARTS LIST FOR THE CHIP PARTS.
7. DC VOLTAGE IN ▭ SHOWS TX CONDITION. (SSB/CW)
8. DC VOLTAGE IN NO MARK SHOWS RX CONDITION. (SSB/CW)

Publisher's Control Number: UT553Z/07SK130

RADIO SHACK
A Division of Tandy Corporation
Fort Worth, Texas 76102

11A8

Printed in Japan